Printed in England by: Chas. F. Thorn & Son, Ltd., Wellington St., Woolwich, S.E.18

INSTRUCTION BOOK

A·J·S

1956

350 c.c. **SINGLE CYLINDER** *500 c.c.*

16MS **MODELS** *18S*

Issued by:

A.J.S. MOTOR CYCLES · LONDON S.E.18

Proprietors: ASSOCIATED MOTOR CYCLES LTD.

INSTRUCTION BOOK

A·J·S

350 c.c. SINGLE CYLINDER MODELS 500 c.c.

1956

Price

TWO SHILLINGS and SIXPENCE

Factories:
BURRAGE GROVE and MAXEY ROAD
PLUMSTEAD, S.E.18

Telephone: *WOOlwich 1223 (7 lines)*
Telegrams: "ICANHOPIT, WOL-LONDON"
Cables: "ICANHOPIT, LONDON"
Codes: A.B.C. 5th and 6th Edition; Bentley's; and Private Codes

Registered Offices:
PLUMSTEAD ROAD, PLUMSTEAD
LONDON, S.E.18 .. ENGLAND

Issued by:

A.J.S. MOTOR CYCLES · LONDON S.E.18

Proprietors: ASSOCIATED MOTOR CYCLES LTD.

CONTENTS

	Page
Carburetter	36
Controls	9
Data	6
Driving	10
Electrical Equipment	69
Engine	24
Forks and Frame	49
Free Service	84
Guarantee	88
Index	89
Information	78
Lubrication	14
Maintenance	22
Repairs and Service	81
Spare Parts	85
Tools and Special Equipment	86
Transmission	39
Wheels and Brakes	59

ILLUSTRATIONS

	Illustrations	Page
A.V.C. unit	32	73
Battery	33	74
Brake adjustment, front	26	64
Brake adjustment, rear	27	65
Brake anchorage, rear	22	61
Brake pedal adjustment	28	66
Brake shoe adjustment	29	67
Carburetter	13	37
Clutch	15	44
Controls	1	8
Dynamo Removal	31	72
Engine lubrication	3	16
Flywheels	9	28
Fork exploded view	18	52
Fork damper details	17	50
Front chain adjustment	16	46
Gearbox	14	39
Gear lever positions	2	11
Headlamp	34	75
Hub bearing details, front	23	62
Hub bearing details, rear (Standard)	25	63
Hub bearing details, rear (Trials)	21	60
Hub, rear and front	24	62
Lubrication chart	6	21
Oil tank	4	17
Oil pump	12	35
Sparking plug	30	70
Spring frame	19	55
Spring frame, Teledraulic leg	20	56
Tank fixing details	7	24
Tappet adjustment	11	32
Tools	37	87
Valve lubrication	5	19
Valve spring compressor	8	27
Valve timing	10	31
Wire connector, snap type	35	76
Wiring diagram	36	77

A·J·S

SINGLE CYLINDER MODELS

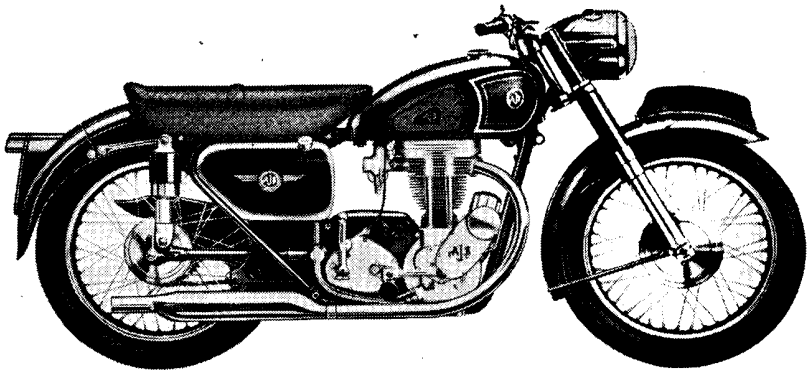

350 c.c. Model 16MS

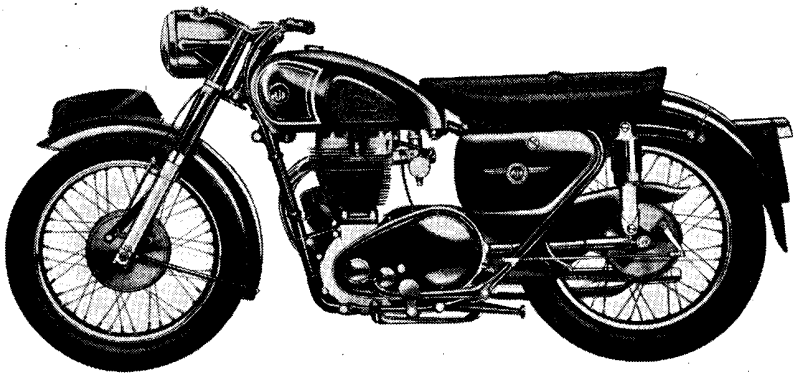

500 c.c. Model 18S

THE MODERN MOTOR CYCLE unquestionably provides one of the most healthy, economical and pleasant means of transport. In addition by reason of its superb braking, high power to weight ratio and ease of control it is, if used with due care, one of the safest vehicles on the road.

It is our sincere desire that every owner should obtain from his mount the service, comfort and innumerable miles of low cost travel that we have earnestly endeavoured to build into it.

It must be borne in mind however, that although of simple design and construction, it is nevertheless a highly specialised piece of engineering and must in consequence be intelligently and efficiently maintained in order to provide unfailing reliability.

In this book we provide non-technical instructions for carrying out all the maintenance operations likely to be called for in normal service, together with assisting illustrations.

To owners of long experience we tender apologies for the elementary nature of some of the contents of this handbook, but owners whether novice or expert are advised to read the contents from beginning to end.

We are at all times pleased to give owners the full benefit of our wide experience in matters relating to motor cycles of our manufacture and elsewhere will be found details of the particulars required when making enquiries of our Service Department.

Safety on the Road

IN the interest of Safety on the Road a few words of warning will not be out of place.

The outstanding manœuverability of a motor cycle over all other vehicles on the road makes it necessary to exercise caution at all times.

There are unfortunately a few motor-cyclists whose reckless driving constitutes a menace not only to themselves but also to other road users resulting in the totally false impression in some quarters that motorcycling is a dangerous pastime.

Take a pride in your riding technique and never rely upon the other fellow doing the right thing.

Your example of careful, courteous and unobtrusive riding will materially contribute to road safety and to the reputation of a fine sporting pastime.

DATA

Identity

Engine Number	Stamped on left hand side of crankcase
Frame Number	Stamped on seat lug of main frame, on right hand side (below the saddle)
Bore	350 c.c. Models—2·7187 in. ($2\frac{23}{32}$ in.)
	500 c.c. Model—3·250 in. ($3\frac{1}{4}$ in.
Stroke	All Models—93 mm. (3·65625 in.)
Engine capacity, in cubic centimetres	350 Models—347
	500 Model—498

Capacities

Location	British	Metric
Engine	350 c.c. 21·170 cub. in.	347 c.c.
Engine	500 c.c. 30·380 cub. in.	498 c.c
Gear box	1 pint	568·2 c.c.
Front fork (each side)	6½ fl. ozs.	184·6 c.c.
Rear leg (each leg)	3 fl. ozs.	85 c.c.
Rear wheel fork hinge bearing	1½ fl. ozs.	42·6 c.c.
Fuel Tank (all except Competition)	3¾ gallons	17·04 litres
Fuel tank (Competition)	2 gallons	9 litres
Oil tank (to top level mark)	5 pints	2·8 litres

Carburetter, Touring and Trials Models

	350 c.c.	500 c.c.
Type	Monobloc 376/5	Monobloc 389/1
Main jet	376/100 size 210	376/100 size 260
Pilot jet	376/076 size 30	376/076 size 30
Throttle valve	376/060 size 3	389/060 size 3
Choke size	1·1/16"	1·5/32"
Needle position	Central notch	Central notch
Needle jet	376/072 size ·1065	376/072 size ·1065

Compression ratios

Model	Normal ratio	Low ratio
350	7·5 to 1	According to piston.
500	7.3 to 1	See Spares List for ratios available.

Ignition (magneto)

Model	Make	Type	Rotation	Point gap	Ignition point before top dead centre (with control in fully advanced position)
Touring 350 c.c.	Lucas	SR-1	Anti-clock	·012 in.	Normal 39°—½"
Touring 500 c.c.	Lucas	SR-1	Anti-clock	·012 in.	Normal 39°—½"
Trials	Lucas	Racing	Anti-clock	·012 in.	Normal 39°—½"

Gear box ratios

Model	First gear	Second gear	Third gear	Fourth gear (top)
Touring	2·65 to 1	1·70 to 1	1·308 to 1	1 to 1
Trials	3·199 to 1	2·437 to 1	1·575 to 1	1 to 1

Gear ratios, Touring Models

Engine sprocket size	First gear	Second gear	Third gear	Fourth gear (top)
15 teeth	18·55 to 1	11·90 to 1	9·15 to 1	7 to 1
16 teeth	17·32 to 1	11·15 to 1	8·58 to 1	6·56 to 1
17 teeth	16·32 to 1	10·47 to 1	8·05 to 1	6·16 to 1
(a) 18 teeth	15·44 to 1	9·90 to 1	7·63 to 1	5·83 to 1
19 teeth	14·55 to 1	9·33 to 1	7·18 to 1	5·49 to 1
20 teeth	13·91 to 1	8·91 to 1	6·86 to 1	5·25 to 1
(b) 21 teeth	13·25 to 1	8·50 to 1	6·54 to 1	5·0 to 1

(a) Standard for 350 c.c. Touring Models (b) Standard for 500 c.c. Touring Models.

Gear ratios, Trials Model

Engine sprocket size	First gear	Second gear	Third gear	Fourth gear (top)
15 teeth	22·4 to 1	17·25 to 1	11·03 to 1	7 to 1
16 teeth Standard	21·0 to 1	15·98 to 1	10 33 to 1	6·56 to 1
17 teeth	19·7 to 1	15·0 to 1	9·7 to 1	6·16 to 1
18 teeth	18·68 to 1	14·2 to 1	9·2 to 1	5·83 to 1
19 teeth	17 57 to 1	13·38 to 1	8·65 to 1	5·49 to 1
20 teeth	16·8 to 1	12·8 to 1	8·37 to 1	5·25 to 1
21 teeth	16·0 to 1	12·18 to 1	7·81 to 1	5·0 to 1

Lighting (bulbs)

Location	Type	Voltage	Wattage	Part number
Head lamp (Pre-focus)	Double filament	6	30×24	312
Pilot lamps	Single contact	6	3	988
Rear lamp	Double filament	6	18 & 3	352
Speedometer	Single contact	6	1·8	53205

Oversize parts

The following are the only "oversize" variations provided for the 350 and 500 c.c. Single Cylinder machines

Big-end rollers : ·001 in. oversize

Cylinder re-bore : ·020 in. and ·040 in. oversize

Pistons and rings : ·020 in. and ·040 in. oversize

Pistons (standard size)

All measurements are subject to a toleration limit of + or − ·0005 in.

Model	Top of skirt diameter	Front to rear clearance	Part number
350	2·7176 in.	·001 in.	013504
500	3·2490 in.	·001 in.	013505

Piston ring gap

Normal	·006 in.
Permissible maximum	·030 in.
Piston ring clearance in groove	·002 in.

Sparking Plug

Model	Make	Type	Thread	Reach	Point gap
All	K.L.G.	FE80	14 mm.	⅜ in.	·020 to ·022 in.

Valve timing (See Illustration 10)

All timing gears are marked for ease of setting. With Marks coinciding correct timing is assured.

Valve Guide Projection (Top of Guide to Boss)

Inlet—½" Exhaust—½"

Valve timing pinion

Retained by nut, threaded $\frac{7}{16}$ in. by 26 threads per in. Left hand thread. Part number 000221.

Weight with empty tanks

Model	Standard	Trials
350	375 lbs.	320 lbs.
500	386 lbs.	—

Wheels (bearing end play) .002 in. (just a perceptible rim rock).

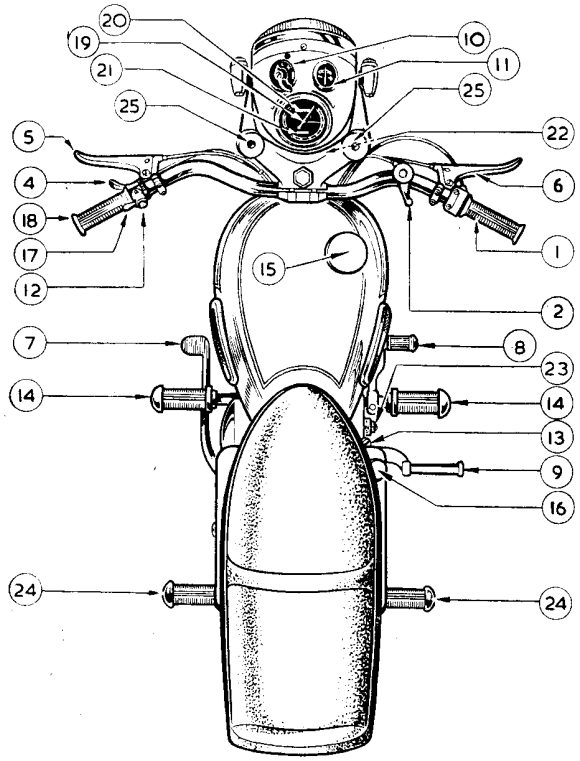

1 THROTTLE TWIST GRIP
2 AIR CONTROL
4 EXHAUST VALVE LIFTER LEVER
5 CLUTCH LEVER
6 FRONT BRAKE LEVER
7 REAR BRAKE PEDAL
8 GEAR CHANGE LEVER
9 KICK-STARTER PEDAL
10 LAMP CONTROL SWITCH
11 AMMETER
12 HORN BUTTON
13 GEAR BOX FILLER CAP
14 RIDER'S FOOTREST
15 PETROL TANK FILLER CAP
16 OIL TANK FILLER CAP
17 HEADLAMP DIP SWITCH
18 DUMMY GRIP
19 SPEEDOMETER, MILES PER HOUR DIAL
20 SPEEDOMETER, TOTAL MILEAGE
21 SPEEDOMETER, TRIP MILEAGE
22 SPEEDOMETER, TRIP RECORDER RESET KNOB
23 GEAR POSITION INDICATOR
24 PILLION FOOTRESTS
25 FORK TOP BOLT (Remove to add oil)

Illustration 1

Controls

CONTROLS

Refer to Illustration 1 page 8.

(1) **Throttle twist grip.** On right handlebar. Twist inwards to open. When fully closed engine should just idle when hot.

(2) **Air.** Small lever on right handlebar. Pull inwards to increase air supply to carburetter. Once set, when engine has warmed up, requires no alteration for different road speeds. Should be fully closed when starting engine from cold.

(3) **Ignition.** When fitted, Small lever on left handlebar. Advances and retards ignition point. Pull inwards to retard. Retard two-fifths of total movement for starting. (Only used on Competition Models).

(4) **Valve lifter.** Small lever close to clutch lever. Lifts exhaust valve from seat, releasing compression in combustion chamber, enabling engine to be easily rotated for starting. Also used for stopping engine if throttle stop is set as advised above.

(5) **Clutch.** Large lever on left handlebar. Grip to release clutch so that drive to rear wheel is disconnected.

(6) **Front brake.** Large lever on right handlebar. Grip to operate front wheel brake and, for normal braking, use in conjunction with rear brake application.

(7) **Rear brake.** Pedal close to left side foot rest. Depress with left foot to apply rear brake. Apply gently and use increasing pressure as the road speed decreases.

(8) **Gear change.** Pedal in horizontal position close to right foot rest. Controls selection of the four speeds, or ratios, between engine and rear wheel revolutions, with a " free," or neutral, position. See illustration 2.

(9) **Kick-starter.** Vertical pedal on right hand side of gear box.

(10) **Lighting switch.** In top of head lamp. Controls lamps by a rotating lever which has three positions :

(1) " OFF " Lamps not on.
(2) " L " Pilot lamps, rear lamp and speedometer lamp on.
(3) " H " Main head lamp, rear lamp and speedometer lamp on.

(11) **Ammeter.** In top of head lamp. Indicates flow of electric current, in, or out, of battery. (" Charge " or " Discharge.")

(12) **Horn switch.** Press switch on left handlebar.

(13) **Gear box filler cap.** Located on top edge of kick-starter case cover. Allows insertion of lubricant and access to clutch inner wire and internal clutch operating lever.

(14) **Footrest for rider.**

(15) **Petrol tank filler cap.** Located in top of fuel tank. To release, slightly depress, turn fully to the left, and then lift away. There are two locking positions. The middle position, between the fully tightened down and " lift away " positions, is in the nature of a " safety " device to prevent loss that might be occasioned by unauthorised meddling.

(16) **Oil tank filler cap.** Located on top edge of oil tank. To remove unscrew.

(17) **Dipping switch.** Trigger switch on left handlebar. Used to select normal or " dipped " beam of head lamp when main lighting switch lever is in the " H " position. (The main head lamp bulb has two filaments.)

DRIVING

FUEL

Although various quality fuels are again available owners are advised to use only the best. The small economy that might be considered to accrue by using the cheaper grades is more than offset by the advantages obtained by using only Number One Grades.

FUEL SUPPLY

Two fuel feed taps are situated underneath the rear end of the petrol tank. (One each side.) Both must be shut off when the machine is left standing for more than a few minutes.

The tap plungers work horizontally. To open, pull plunger out. Push right in to close.

Normally, only use the tap on the right hand side of the machine and then the other side will act as a reserve supply. Always re-fuel as soon as possible after being forced to call upon the reserve and then, at once, close the " reserve " tap.

It will be noted that, by fitting two petrol feed taps, it is possible to remove the petrol tank from the machine without the necessity of first draining it of fuel.

STARTING THE ENGINE FROM COLD

(a) Check that there is sufficient fuel in the petrol tank.

(b) Check that there is sufficient oil in the oil tank.

(c) Check that the gear pedal is in the neutral position.

(*d*) Pull outward the plunger of off-side petrol tap.

(e) Check that the air control lever is in the fully closed position.

(*f*) Open the throttle not more than one-sixth of the total movement of the twist grip.

(*g*) Depress the plunger on the top of the carburetter float chamber until it can be felt the chamber is full of petrol.

(*h*) Raise the valve lifter lever and, while keeping it raised, turn over the engine several times by depressing the kick-starter pedal, three times, the object being to free the engine. (This only applies if the engine is cold.)

(*i*) Depress the kick-starter until compression is felt, then raise the valve lifter lever and ease the engine just over compression. Then, after allowing the kick-starter pedal to return nearly to its normal position, give it a long swinging kick with the valve closed. Flywheel momentum will carry over compression and the engine should fire immediately. If it fails to do so repeat exactly the same process.

Do not allow kick starter to return violently against its stop.

The kick-starter mechanism must be allowed to engage properly before putting heavy pressure on the kick-starter crank pedal pin. That means there are two definite and separate movements when operating the mechanism by depressing the crank.

The first is a slow and gentle movement which ends when it is felt the quadrant has engaged with the teeth on the ratchet pinion.

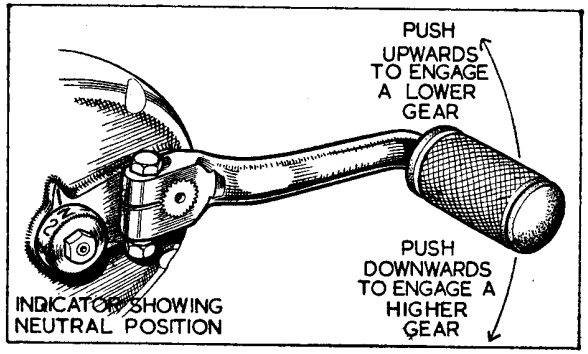

Illustration 2

Showing the gear indicator drum which upon assembly is set to record the various gears and neutral position, as the respective figure or letter N registers with index mark on the gear box shell.

Upon re-asembly, after dismantling for any purpose, the index disc should be correctly re-set for future reference.

The first slow and gentle movement is essential to avoid damage to the teeth of the kick-starter quadrant.

After the engine has started, slowly open the air lever until it runs evenly. Then set the throttle so that the engine is running at a moderate speed (neither racing nor ticking over) and allow to warm up. While doing this, check the oil circulation as detailed in page 13. The machine can then be taken on the road.

NOTE—Do not race up the engine from cold and do not flood the carburetter to such an extent that petrol is dripping because then, in the event of a backfire, there is a danger of such loose petrol igniting. This cannot possibly happen if the starting instructions are carefully followed, but, in the event of a fire, there is no cause for panic. Merely turn off the petrol tap to isolate the main supply, open wide the throttle and turn over the engine by operating the kick-starter pedal when suction will extinguish the fire.

STOPPING THE ENGINE

To stop the engine, close the throttle, raise the valve lifter lever and keep it raised until the engine has ceased to revolve.

ON THE ROAD

Having started and warmed up the engine, take the machine off the stand, sit astride it, free the clutch by pulling up the large lever on the left bar and engage the lowest gear. Next, slowly release the clutch lever and the machine will commence to move forward. As it does this, the engine speed will tend to drop as it picks up the load so it will be necessary to increase the throttle opening, gradually, to keep the engine speed gently rising.

When well under way, disengage the clutch, slightly close the throttle, engage second gear and release the clutch lever, then open up the throttle to increase the speed of the machine. Repeat these operations in order to engage third and top gears.

To engage a higher gear the pedal is pressed downward with the toe and a lower gear is obtained by raising the pedal with the instep. To engage first gear from the neutral position, the pedal is therefore raised. After each pedal movement, internal springs return the pedal to its normal horizontal position.

The pedal must be moved to the full extent of its travel when selecting a gear, either up or down. It must not be " stamped down " or jabbed, but firmly and decisively moved till it stops. A half-hearted movement may not give full engagement. Keep the foot off the pedal when driving and between each gear change because, unless the lever can freely return to its normal central position, the next gear cannot be engaged.

STOPPING THE MACHINE

To stop the machine, close the throttle, declutch by lifting the large lever on the left handlebar, and gently apply both brakes, increasing the pressure on them as the road speed of the machine decreases. Place the gear change foot pedal in the neutral position and stop the engine.

Before leaving the machine, turn off the fuel supply.

Important

*Never drive away at **high speed** when starting a run with a **cold** engine. **Give** the oil a **chance** to warm up and thin out, **particularly** when the machine is **cold**. Until the oil reaches its **normal running temperature** the circulation is **restricted**. **Seizures** can be **avoided** by taking this simple **essential precaution**.*

RUNNING IN

Although it is customary to quote permitted maximum speeds on the various gears during the period of running in, these are really no guide to overdriving, the only essential thing to avoid being the use of large throttle opening.

If the precaution is taken of limiting the use of the throttle to about one-third of its opening during the first 1,000 miles, irrespective of the road speed, and whether on the level or climbing, the necessary conditions for running in will have been observed.

Special attention must be given, during the running in period, to such details as valve rocker adjustment, chains, brakes, contact breaker points, and steering head bearings, all of which tend to bed down in the first hundred miles or so. Particular note must be made of the adjustment of steering head bearings, which, if run in a slack condition, will be quickly ruined. After this bedding down process has taken place, adjustments to such details will only be necessary at lengthy intervals.

After about 1,000 miles have been covered larger throttle openings may be gradually indulged in for short bursts only.

Until at least 2,000 miles have been covered the owner of a new machine is strongly advised to curb his natural desire to learn the mount's maximum capabilities. Restraint in this direction will be amply repaid later.

NOTES ON DRIVING

If, at first, the lowest gear will not engage, release the clutch lever and after a second or two, make another attempt. This condition may exist in a new machine, but it tends to disappear after a little use.

Always endeavour to make the movements of hand (on the clutch) and foot (on the gear pedal) as simultaneous as possible, and remember, in all gear changes, a steady pressure of the foot is desirable. This pressure should be maintained until the clutch is fully released. It is not sufficient just to jab the foot pedal and then release the clutch lever. When actually in motion, it will be found sufficient to merely free the clutch a trifle, to ease the drive when changing gear and, with reasonable care, changes of gear then can be made without a sound.

Do not unnecessarily race the engine or let in the clutch sufficiently suddenly to cause the rear wheel to spin. Take a pride in making a smooth, silent get-away.

When changing up to a higher gear, as the clutch is freed, the throttle should be slightly closed so that the engine speed is reduced to keep in step with the higher gear ratio. Conversely, when changing down to a lower gear, the throttle should be regulated so that the engine speed is increased to keep in step with the lower gear ratio.

Do not slip the clutch to control the road speed.

The clutch is intended to be used only when starting from a standstill and when changing gear. It must **NOT** be operated to ease the engine, instead of changing gear, or be held out, in order to "free-wheel."

The exhaust valve lifter is **NOT** used in normal driving on main and secondary roads.

When travelling slowly, such as may occur in traffic or on a hill, and the engine commences to labour, it is then necessary to change to a lower gear. Engine "knocking" or "pinking" and a harshness in the transmission are symptoms of such labour. A good driver is able to sense such conditions and will make the change before the engine has reached the stage of distress. The gear box is provided to be used and consequently full use should be made of the intermediate gears to obtain effortless running and smooth hill climbing.

Keep the feet clear of the brake and gear pedals when not actually using them and keep the hand off the clutch lever when not in use.

Drive as much as possible on the throttle, making the minimum use of the brakes.

When using the machine on wet or greasy roads, it is generally better to apply **BOTH** brakes together, because sudden or harsh application of either brake only, under such conditions, may result in a skid.

In all conditions, it is advisable to make a habit of always using both brakes together rather than habitually using the rear brake and reserving the front brake for emergency.

LUBRICATION

LUBRICANTS TO USE

Efficient lubrication is of vital importance and it is false economy to use cheap oils and greases.
We recommend the following lubricants to use in machines of our make.

FOR ENGINE LUBRICATION

HOT above 50° F	COLD 32° F to 50° F	EXTREME COLD below freezing point (32° F)
SAE 50	SAE 30	SAE 20
Mobiloil **D**	Mobiloil **A**	Mobiloil **Arctic**
Castrol **Grand Prix**	Castrol **XL**	**Castrolite**
Energol SAE 50	**Energol SAE 30**	**Energol SAE 20**
Essolube 50	**Essolube 30**	**Essolube 20**
Shell **X-100** Motor Oil **50**	Shell **X-100** Motor Oil **30**	Shell **X-100** Motor Oil **20/20W**

NOTE—For the British Isles and much of Europe the **Cold** and **Hot** recommendations approximate to **Winter** and **Summer** conditions respectively. The **Extreme Cold** recommendations refer to wintry conditions in parts of Northern Europe, Canada, the Baltic and Scandinavian countries, and high mountainous districts where extreme cold is the average condition.

FOR GEAR BOX LUBRICATION

HOT above 50° F	COLD 32° F to 50° F	EXTREME COLD below freezing point (32° F)
SAE 50	SAE 50	SAE 30
Mobiloil **D**	Mobiloil **D**	Mobiloil **A**
Castrol **Grand Prix**	Castrol **Grand Prix**	Castrol **XL**
Energol SAE 50	**Energol SAE 50**	**Energol SAE 30**
Essolube 50	**Essolube 50**	**Essolube 30**
Shell **X-100** Motor Oil **50**	Shell **X-100** Motor Oil **50**	Shell **X-100** Motor Oil **30**

NOTE—For the British Isles and much of Europe the **Cold** and **Hot** recommendations approximate to **Winter** and **Summer** conditions respectively. The **Extreme Cold** recommendations refer to wintry conditions in parts of Northern Europe, Canada, the Baltic and Scandinavian countries, and high mountainous districts where extreme cold is the average condition.

FOR HUB LUBRICATION AND ALL FRAME PARTS USING GREASE

Mobilgrease No. 4 — **Castrolease Heavy** — **Energrease C3**
Esso Pressure Gun Grease — Shell **Retinax A.** or **C.D.**

FOR TELEDRAULIC FRONT FORKS AND TELEDRAULIC REAR LEGS

Mobiloil **Arctic** (SAE-20) — **Castrolite** (SAE-20) — **Energol SAE 20**
Essolube 20 (SAE-20) — Shell **X-100** Motor Oil **20/20W** (SAE-20)

FOR REAR CHAINS

Mobilgrease No. 2 — **Esso** Fluid Grease — **Energrease A.O.**
Castrolease Grease Graphited
Heated Until Just Fluid

See Application Instructions, page 19.

When buying oils and greases it is advisable to specify the **Brand** as well as the grade and, as an additional precaution, to buy only in sealed containers or from branded cabinets.

ENGINE LUBRICATION SYSTEM

This is by dry sump system. Oil feeds, by gravity, from the oil tank to the pump in the crankcase. The pump forces oil to various parts, which then drains to the bottom of crankcase sump. The pump then returns oil to the tank. This process is continuous while the engine is revolving. The pump is so designed that it has a greater capacity on the return side to that on the delivery side to ensure that all oil is extracted from the crankcase. A magnetic filter in the sump removes foreign matter collected by the oil in its passage through the engine. A metal gauze strainer is fitted to the oil feed pipe in the oil tank to prevent pieces of fluff, etc., which may find their way into the tank when replenishing, from entering the oil pump. (See Illustration 4.) It should be cleaned in petrol each time the oil tank is drained.

ENGINE OIL PUMP

The pump has only one moving part. This is the plunger which revolves and reciprocates. Rotation is caused by the worm gear on the timing side flywheel axle. Reciprocation is caused by the guide pin which engages in the profiled groove cut on the plunger. Oil is fed to the pump through the lower of the two oil pipes between tank and crankcase and is returned through the upper pipe.

If, for any reason, the crankcase is dismantled **the oil pump plunger must be removed from its housing before attempting to separate the crankcase halves.** It is not necessary to remove the small timing pinion which will pass through in situ.

Important

Under no circumstances should either the pump plunger or guide screw be disturbed in ordinary routine maintenance.

ENGINE OIL CIRCULATION

The oil pump forces oil through :—

(*a*) Passages drilled through the timing side flywheel axle, timing side flywheel and crank pin to lubricate the timing side bearing and the big-end bearing. The splash passes to interior of cylinder, to lubricate the cylinder and piston, and then falls into the crankcase sump.

(*b*) A passage in timing gear case where it "builds up" to a predetermined level to lubricate the timing gears and then overflows into the crankcase sump.

(*c*) Through a pipe from the front of oil pump housing to the rocker box by which all rocker gear and valve stems are lubricated and then falls through the push rod cover tubes and tappet guides to the timing gear case and, from there, drains into the crankcase sump, as detailed in (*b*)

The oil pump extracts oil in the crankcase sump and returns it to oil tank. On its way it passes the magnetic filter located in the crankcase sump.

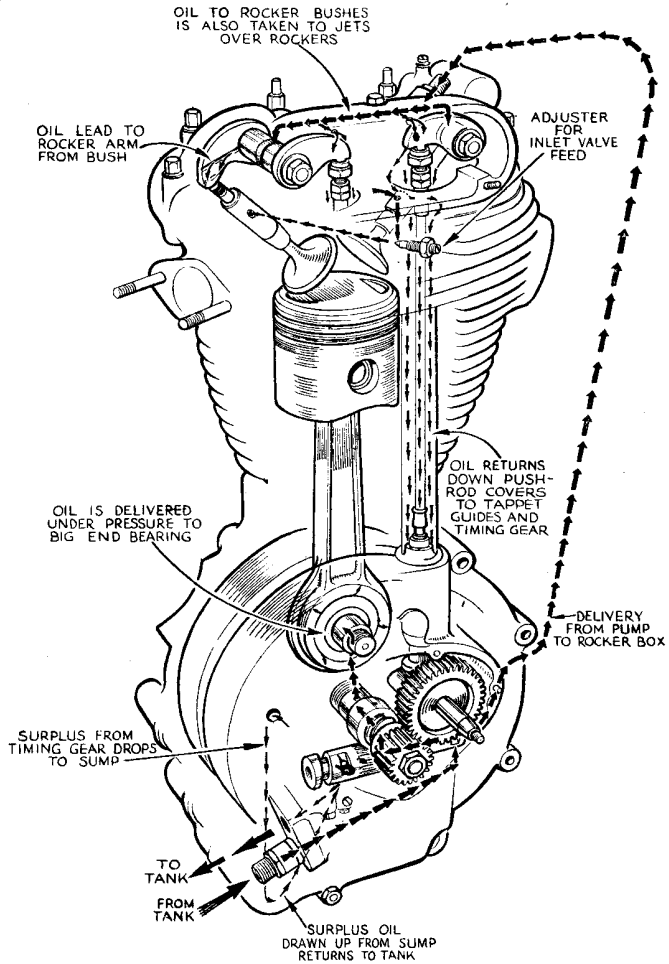

Illustration 3

Engine Oil Circulation

THE OIL TANK AND FILTER

The level of oil in the supply tank should never be allowed to fall below the low level mark and, upon replenishment, should not be higher than the top level mark otherwise, when starting the engine, the bulk of oil in the crankcase sump may be greater than the space available in the tank.

A metal gauze strainer is secured in the tank end of the feed pipe union.

After the first 500 miles, again at 1,000 miles, and subsequently at 5,000 mile intervals, it is recommended that the oil tank is drained, the oil filter cleaned in petrol and the tank replenished with new oil.

CHECKING OIL CIRCULATION

Provision is made to observe the oil in circulation and it is advisable to do this before each run.

If the filler cap on the oil tank is removed the end of the oil return pipe will be noticed below the level of the filler cap orifice and the returning oil can be seen running from it. This check should be made immediately after starting the engine from cold. This is because while the engine is stationary, oil from all parts of the interior of the engine drains back into the crankcase sump, so that, until this surplus is cleared, the return flow is very positive and continuous. Therefore, if the oil circulation is deranged, the fact is apparent at once by the lack of a steady return flow.

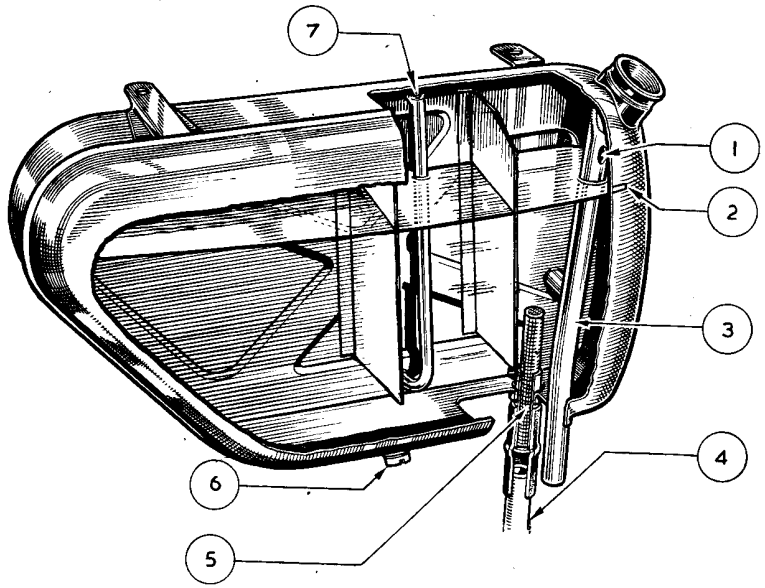

1 OUTLET IN OIL RETURN PIPE.
2 LEVEL INDICATOR LINE.
3 OIL RETURN PIPE.
4 OIL FEED PIPE.
5 OIL FEED GAUZE FILTER.
6 DRAIN PLUG.
7 VENT PIPE.

Illustration 4

Interior view of the oil tank showing the metal strainer mounted on the entry end of the feed pipe union, the return flow pipe from the engine to tank via the small spout, located so that it can be inspected by removing the tank filler cap, and air vent pipe, provided to ensure freedom from air-locks.

TO REMOVE THE MAGNETIC FILTER (located in the crankcase)

Incorporated with the crankcase drain plug is a powerful magnetic filter. To remove the filter merely unscrew the plug.
As the metal particles will adhere very strongly to the magnet they must be forcibly removed by wiping the magnet with a greased rag. The grease will help to retain the metal particles on the rag. Keep the magnet away from iron filings, etc., that may litter the bench, and do not bring the magnet into contact with large pieces of iron and steel, such as a bench vice, for this will impair the efficiency of the magnet and consequently its action as a filter.

To remove and clean the feed pipe metal filter :
First drain tank and then release the oil feed pipe from the rubber connecting sleeve on the metal feed pipe protruding from the bottom of the oil tank.
The metal filter may come away with the rubber sleeve, in which case there is no need to disturb it. On the other hand it may remain in the oil tank bottom pipe, in which case it may be withdrawn by grasping the ringed open end and pulling away.
After removal the filter should be cleaned in petrol and allowed to dry before re-fitting.
Reverse the above procedure to re-fit the filter and pipes.

ADJUSTMENT OF OIL FEED

The internal flow of oil is regulated by fixed restrictions. No adjustment is provided except for the oil feed to the inlet valve stem. This adjustment is made by a needle pointed screw located in the right side of cylinder head. (See Illustration 5.) It is locked in position by a nut. The approximate correct setting is one-sixth of a complete turn from the fully closed position. Once set it requires little, or no, adjustment.
Inlet valve squeak indicates the oil feed adjustment is not open enough. Excessive oil consumption, a smoky exhaust or an oiled sparking plug, generally indicates the oil feed adjustment is open too much.

EXHAUST VALVE STEM LUBRICATION

The exhaust valve stem is lubricated by oil flowing through a passage drilled in the cylinder head. No adjustment is provided.

LUBRICATION POINTS TO REMEMBER

A clogged metal strainer, in the gravity feed pipe, will cause improper, or no, oil circulation. This can only occur as the result of adding dirty oil when replenishing the tank.
Both end caps on pump plunger housing must be air-tight
Check oil circulation before starting each run.

GEAR BOX LUBRICATION

Use one of the grades of Oils specified. In no circumstances must heavy grease be used.
Lubricant is inserted through the filler cap orifice mounted on top edge of kick-starter case cover.
The gear box must not be entirely filled with oil. An excess will cause leakage. Check the level every 1000 miles and top-up if necessary.
A screwed drain plug in gear box shell, low down at rear, facilitates gear box flushing and change of lubricant. An oil level plug, adjacent to K-S spindle, indicates maximum permissible oil level (content 1 pint).

HUB LUBRICATION

Keep hubs packed with grease. This prevents entry of water and dirt. Grease nipples accessible through hole in hub disc. Inject small quantity of grease. Excessive grease may impair efficiency of brakes.

BRAKE DRUM BEARING (Competition Models excepted)

The independent ball bearing upon which the rear brake drum is mounted on spring frame models is packed with grease upon assembly and requires no further attention for a considerable time.
During a general overhaul however it is recommended that the bearing is dismantled and re-packed with fresh hub grease.

CHAIN LUBRICATION

Front driving chain and dynamo chain run in oil bath. (Front chaincase.) Use engine oil. Maintain level to height of the inspection cap opening.
Oil in front chaincase also lubricates the engine shock absorber. Transmission harshness generally indicates level of oil in chaincase is too low.
Remove chaincase inspection cap each week, inspect level of oil, top-up as necessary.

To remove inspection cap :—
Unscrew knurled screw about four turns.
Slide cap sideways, till the back plate can be slipped through the opening, and take away the complete cap assembly.
When replacing inspection cap, centralise cork washer and then fully tighten knurled screw. Essential this is kept tight otherwise cap assembly will be lost.
Rear driving chain should be removed occasionally for lubrication particularly under winter conditions.
Clean chain in paraffin, allow to drain and wipe. Then immerse in one of the greases recommended, heated to just fluid state. Leave in soak for at least ten minutes while maintaining grease fluidity. Then hang to drain off surplus and replace.
Engine oil is a poor substitute for one of the recommended greases and if used the chain should be allowed to soak for several hours to ensure penetration to all joints, hanging to drain off surplus before refitting.
See chain removal and refitting instructions, page 47.
Magneto chain runs in case packed with grease.

BRAKE EXPANDER LUBRICATION

Grease nipple on each brake expander bush. (One on each brake cover plate.) Use grease sparingly. Excessive grease may impair efficiency of brakes.

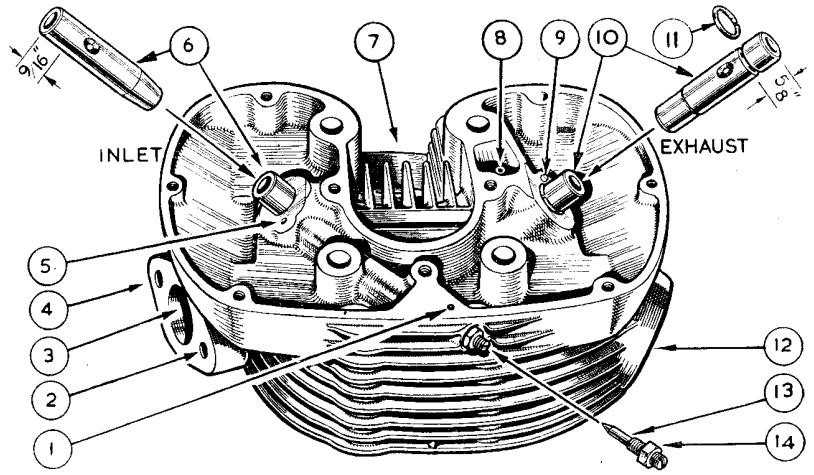

Illustration 5

The valve guides and the needle adjusting screw are also shown withdrawn

1 PLAIN HOLE, FOR OIL FEED TO INLET VALVE.
2 TAPPED HOLE, TO ACCOMMODATE CARBURETTER RETAINING STUD.
3 INLET PORT.
4 TAPPED HOLE, TO ACCOMMODATE CARBURETTER RETAINING STUD.
5 HOLE, TO ACCOMMODATE DOWEL LOCATING VALVE SPRING SEAT.
6 GUIDE, FOR INLET VALVE.
7 TAPPED HOLE, OR SPARKING PLUG.
8 PLAIN HOLE, FOR OIL FEED TO EXHAUST VALVE.
9 HOLE, TO ACCOMMODATE DOWEL PIN LOCATING VALVE SPRING SEAT.
10 GUIDE, FOR EXHAUST VALVE.
11 CIRCLIP.
12 EXHAUST PORT.
13 NEEDLE SCREW, ADJUSTING OIL FEED TO INLET VALVE.
14 LOCK NUT, FOR NEEDLE ADJUSTING SCREW.

BRAKE ROD JOINT LUBRICATION

A few drops of engine oil on each brake rod yoke end pin and on the threaded portion of brake rod. (One pin on yoke each end of brake rod and on bottom of front brake cable.)

BRAKE PEDAL LUBRICATION

Grease nipple in heel of foot brake pedal.

SPEEDOMETER LUBRICATION

One grease nipple on top of speedometer gear box attached to right side of rear wheel spindle. (No other part of the speedometer requires lubrication.)

STEERING HEAD BEARING LUBRICATION

One grease nipple on Front Frame Head Lug and another on right hand side of Handlebar Lug.

CONTROL CABLE LUBRICATION

To ensure free smooth action the clutch and throttle cables are fitted with a conveniently situated grease nipple. Use engine oil and hold the grease gun as near verticle as possible (spout downward) to obtain efficient ejection of oil, the gun being primarily intended for grease. Lubricate at first sign of stiff or jerky action.

CONTROL LEVER LUBRICATION

Occasionally a drop of engine oil on all moving parts of the handlebar control levers.

If twist grip is too stiff : remove two screws binding the two halves of the clip. This releases the grip which may be pulled off the handlebar. Smear handlebar, the drum on which the inner wire is wound and the friction spring on the half clip with grease and replace.

REAR FORK HINGE

Heavy Gear Oil. S.A.E. 140 (see page 55).

LUBRICATION CHART

The figures in diamond frames refer to parts located on the left hand side of the machine and those in circles refer to parts located on the right hand side.

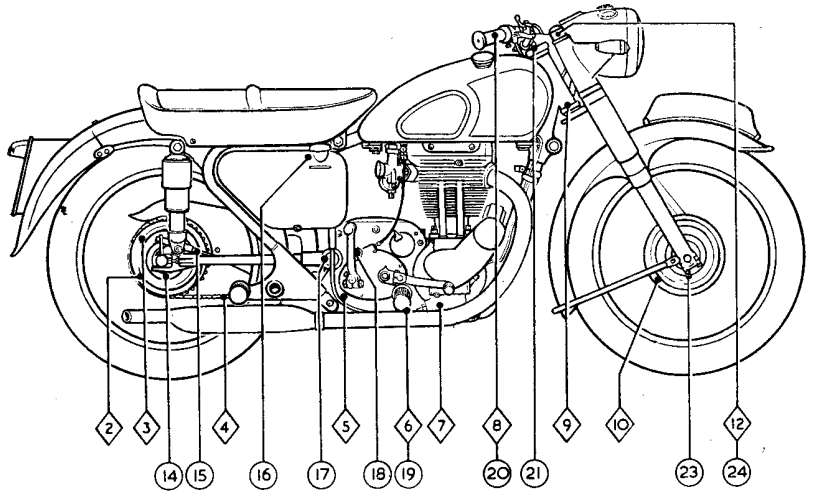

Illustration 6

Lubrication Chart

Engine Oil Locations

16 MAIN OIL TANK.
7 FRONT CHAINCASE.
8, 20 CONTROL LEVER MOVING PARTS.
2 BRAKE ROD JOINTS.
6, 19 CENTRE AND PROP STAND HINGE PINS.

Hydraulic Fluid Locations

12, 24 FRONT TELEDRAULIC FORKS.

Heavy Engine Oil Location

18 GEAR BOX.

Grease Locations

23 FRONT HUB.
14 REAR HUB.
21 STEERING HEAD TOP BEARING.
9 STEERING HEAD AOTTOM BEARING.
15 SPEEDOMETER GEAR BOX.
10 FRONT BRAKE EXPANDER.
3 REAR BRAKE EXPANDER.
5 BRAKE PEDAL SPINDLE.

Heavy Gear Oil Location

17 REAR FORK HINGE. S.A.E.140

Molten Grease Location

4 REAR CHAIN.

When buying oils and greases it is advisable to specify the **Brand** as well as the grade and, as an additional precaution, to buy only in sealed containers or from branded cabinets.

MAINTENANCE

PERIODICAL MAINTENANCE

Regular maintenance, attention to lubrication, and certain adjustments must be made to ensure unfailing reliability and satisfactory service. This necessary attention is detailed below, and owners are strongly recommended to follow carefully these suggestions and to make a regular practice of doing so from the first.

The reference numbers, in brackets, refer to the locations specified on the Lubrication Chart, Illustration 6.

DAILY

Oil tank	Inspect oil level (16.) and top-up if necessary. Check oil circulation.
Petrol tank	Check level and re-fill if necessary.

WEEKLY

Oil tank	Check level (16.) and re-fill if necessary.
Tyres	Check pressures and inflate if necessary.

EVERY 500 MILES

Oil tank	Drain at first 500 miles and re-fill with new oil. (16.)
Gear box	Drain at first 500 miles and re-fill (18.) 1 pint.
Chaincase	Check level of oil when machine is standing vertically on level ground, when level of oil should not be less than $\frac{3}{16}$" below bottom edge of inspection orifice. (7.) Fill up to orifice if level is low.
Battery	Inspect each cell for level of electrolyte and top-up with distilled water if necessary. (See pages 79 and 80.) Level of electrolyte should just be over top of plates. Beware overfilling.

EVERY 1,000 MILES

Oil tank	Drain at first 1,000 miles and re-fill with new oil. (16.)
Rear chain	In wet weather, remove and soak in molten grease.
Gear box	Add 2 fluid ounces of specified oil. (18.)
Hubs	Inject small amount of grease. (14 & 23.)
Expanders	Inject small amount of grease. (3 & 10.)
Steering head	Inject small amount of grease. (9 & 21.)
Small parts	Smear all moving parts with engine oil and wipe off surplus.
Air Filter	(If fitted) clean and re-oil filter element.

EVERY 3,000 MILES

Rear chain	In dry weather, remove and soak in molten grease.
Brake pedal	Inject small amount of grease. (5.)
Speedometer	Inject small amount of grease into speedometer gear box. (15.)
Magneto	Clean contact breaker points and re-set if necessary.
Plug	Clean sparking plug and re-set points as necessary. (See page 70.)
Steering head	Test steering head for up and down movement and adjust if necessary.
Bolts and nuts	Check all nuts and bolts for tightness and tighten if necessary, but beware of over-tightening.
Rockers	Check O.H.V. rocker adjustment and correct if necessary.

EVERY 5,000 MILES

Oil tank	Drain and re-fill with new oil. (16.) If machine is only used for short runs renew oil every three months instead of mileage interval.
Filters	Clean metal mesh filter in oil tank. (Illustration 4.)
Dynamo	Clean as detailed in Electrical section.
Front fork	Check each side of front fork for hydraulic fluid content and, if necessary, top up. (12 & 24.) Insufficient oil content is indicated by abnormally lively action.
Rear legs	(If fitted) Check each leg for hydraulic fluid content and, if necessary, top-up. Insufficient oil content is indicated by abnormally lively action.
Carburetter	Remove carburetter float chamber side cover and clean interior. Also detach petrol pipe banjo and clean gauze strainer. Extreme care required to avoid damage.

EVERY 10,000 MILES

Magneto and Dynamo	Get a **Lucas Service Station** to dismantle, clean, lubricate and generally service.
Air Filter	(If fitted) renew filter element.

ENGINE SERVICE

ACCESS

For almost all service work to the upper parts of the engine, it is necessary, in order to obtain accessibility, first, to remove the petrol tank. The two petrol taps facilitate this operation by removing the need to first drain the tank of petrol.

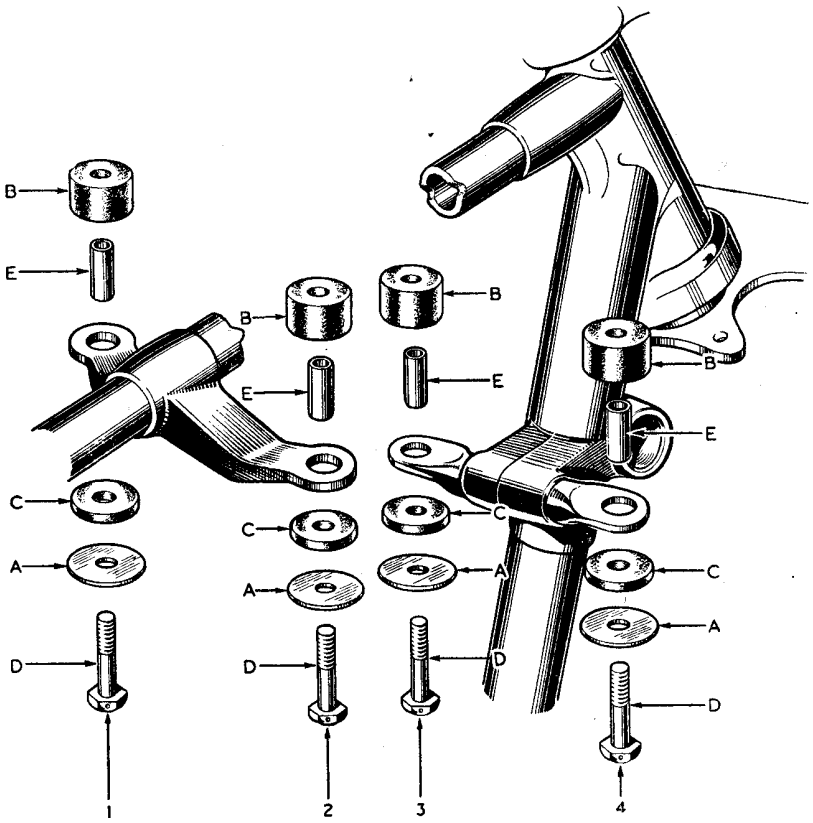

Illustration 7

Details and order of assembly of the fuel tank fixing bolts and components

			Part Number	
A	...	METAL WASHER	014999	1¼" diameter.
B	...	THICK RUBBER PAD	014995	⅜" high.
C	...	THIN RUBBER PAD	014996	3/16" high.
D	...	TANK FIXING BOLT	014997	1⅛" × 5/16" × 26.
E	...	SLEEVE FOR FIXING BOLT	014998	11/16" long.

TO REMOVE THE PETROL TANK

Close both petrol taps and remove the cap nut securing each petrol pipe banjo connector. Use two spanners, one to hold the tap and the other to unscrew the cap nut.

Beware losing the fibre washers (4 in all) fitted one each side of each banjo connection.

Cut the wires interlacing the four fixing bolts.

Remove the tank fixing bolts and the tank is then free to be taken away.

NOTE—The disposition of the various rubber and metal washers and tubular spacers should be specially observed so that they may be correctly replaced.

TO REPLACE THE PETROL TANK

Proceed in reverse order to removal. Screw firmly home the four fixing bolts and interlace them, in pairs, with 22 gauge copper wire.

TO REMOVE THE ROCKER BOX

Remove the petrol tank.

Remove the three nuts and fibre washers retaining the rocker box side cover and take away the cover.

Disconnect the oil pipe feeding oil to the rocker box.

Turn over engine until both valves are completely closed.

Remove engine steady bracket by removing bolt from frame clip and nuts and washers from the rocker box bolt extensions.

Remove the nine bolts retaining rocker box to cylinder head.

Disconnect valve lifter cable.

Tilt upward the right hand side of rocker box and extract the two long pushrods. Lay these aside so they may be identified and replaced in their original position.

The rocker box may then be lifted off.

TO REPLACE THE ROCKER BOX

Carefully clean the top of cylinder head and lower face of rocker box.

Revolve engine until both tappets are down, *i.e.*, the top dead centre of firing stroke. Lay the composition jointing washer on cylinder head. This must be faultless. If necessary, renew.

Lay the rocker box in position then slightly raise the right hand side to allow the long push rods to be inserted into their original respective positions.

Insert all nine rocker box fixing bolts and note that the bolt with short head is in the centre right hand position and the bolts with threaded extensions are fitted one each side of the central short head bolt.

Tighten each bolt in turn bit by bit until all are fully home.

Replace the engine steady stay.

Turn engine over several times to ensure parts have bedded home.

Re-fix valve lifter cable.

Re-fix rocker box oil pipe union nut using two spanners to ensure that the union screwed into rocker box does not turn while the nut is being tightened.

Check tappet clearances and re-set if necessary.

Inspect rubber fillet on rocker box side cover and renew if not perfect.

Replace the side cover ensuring that a fibre washer is fitted under each of the three retaining nuts.

Beware of over tightening these nuts, the joint being made by the rubber fillet excessive pressure is not necessary.

Replace the petrol tank.

DECARBONISATION

Instead of the usual stipulated mileage interval between periods of decarbonisation, it is recommended that this is undertaken only when the need for same becomes apparent because of excessive pinking, loss of power or generally reduced performance. When undertaken, unless it is thought necessary to inspect the piston and rings, the cylinder barrel is best left undisturbed. The various stages in decarbonisation are described below.

TO REMOVE THE CYLINDER HEAD

Remove

The petrol tank.

The sparking plug.—See note below.

The rocker box.

Remove the exhaust system by :

Remove nut, and washers, retaining exhaust pipe to its stay.

Remove nut, and washers, retaining silencer to its stay.

Remove complete exhaust system, by pulling away from stays and then downwards. from the exhaust port in cylinder head.

Remove carburetter by :

Unscrew two carburetter retaining nuts.

Take away carburetter and rest on saddle.

Remove

The four bolts retaining cylinder head to barrel, and head is free to be taken away. While doing this the push rod cover tubes will come away with the head.

Note

If the sparking plug resists removal, do not use force but brush paraffin round the body and leave for a time to soak before making further effort.

TO REMOVE AND REPLACE THE VALVES AND GUIDES

Remove the cylinder head.

Remove the valve springs by inserting a finger in the spring coil and sharply pull upward.

The top spring collar and split collet can then be removed leaving the valve free to be withdrawn.

A sharp light tap on the valve collar may be necessary to free the taper split collet. It will be observed that the valve spring seat has a raised impression on its under side which registers with a hole drilled on the valve guide boss to ensure accurate positioning.

To remove an inlet valve guide, thoroughly clean protruding end of guide to be removed. Apply gentle heat and press guide downwards. To remove an exhaust valve guide, apply gentle heat, press the guide upwards sufficiently to permit removal of the external circlip. Then, clean the top of the guide, and press downwards to remove. Re-heat when replacing and see that correct projection is obtained, viz. $\frac{1}{2}$". Also see that oil hole in guide is in correct alignment.

TO REPLACE A VALVE

After cleaning valve guide bores, smear each valve stem with clean oil, insert, and apply top collar and split collet.

Then apply the valve springs which although possible to fit by hand are more easily manipulated with a special compressor tool Part No. 018276 illustration 8. To operate this tool apply the top end of the valve spring to its groove in the top cap, then insert a short rod (one of the rocker box fixing bolts suits admirably) through the holes in this tool and the valve spring coils and pull outward and upward until the ends of the prong of the spring can be rested on the seat, then press down with the fingers. Withdraw the bolt or rod when the compressor lies against the cylinder head, retaining pressure with the fingers until the bolt has been withdrawn and the tool removed, when the spring can be readily pushed down to its proper location with the prongs laying flat upon the seat.

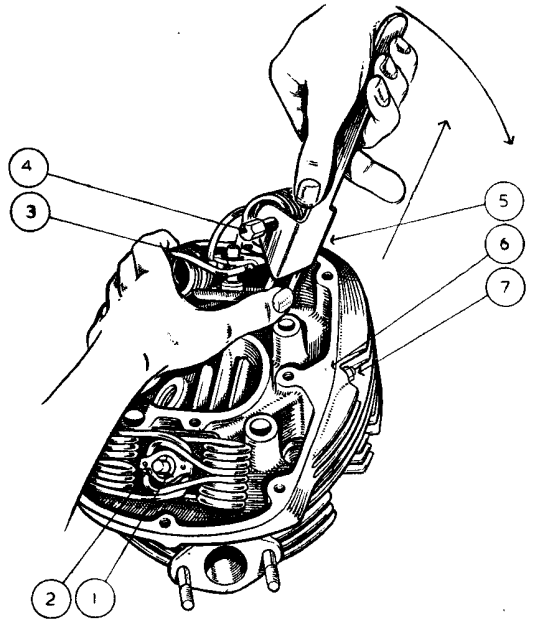

Illustration 8

Application of valve spring compressor

1 COLLET, FOR VALVE.

2 COLLAR, FOR VALVE SPRING.

3 COLLAR, FOR VALVE SPRING.

4 BOLT THROUGH TOOLS AND COILS OF VALVE SPRING.

5 VALVE SPRING COMPRESSOR TOOL.

6 OIL PASSAGE FROM ROCKER BOX TO INLET VALVE GUIDE.

7 SCREW WITH LOCK NUT ADJUSTING OIL FEED TO INLET VALVE.

NOTE—The special valve spring compressor tool is not part of the standard tool kit but can be obtained from any of our dealers (Part No. 018276.)

It is essential that the collets are correctly located on the valve stems. It will be observed that the collet has two grooves machined in the bore and those two grooves must register with the two rings on the valve stem. If fitted so that only one of the grooves engages the ringed valve stem, damage will almost certainly result.

On 350 c.c. the inlet valve head is larger in diameter than the exhaust. Therefore unintended interchange is not possible.

On 500 c.c. both valve heads are identical in dimensions but are made of different materials. Therefore, upon removal, valves should be laid aside so that they may be identified for re-fitting. In case of doubt, see marking " In " or " Ex " on stem adjacent to collet grooves.

REMOVING CARBON DEPOSIT

Do not use a sharp implement for removing carbon deposit from the interior of the cylinder head and the piston crown. A blunt piece of soft brass will be found quite suitable and the use of such will obviate the risk of making deep scratches. Care is necessary to avoid damaging the valve seatings and in no circumstances should any abrasive material, such as emery, or emery cloth, be used for cleaning and polishing.

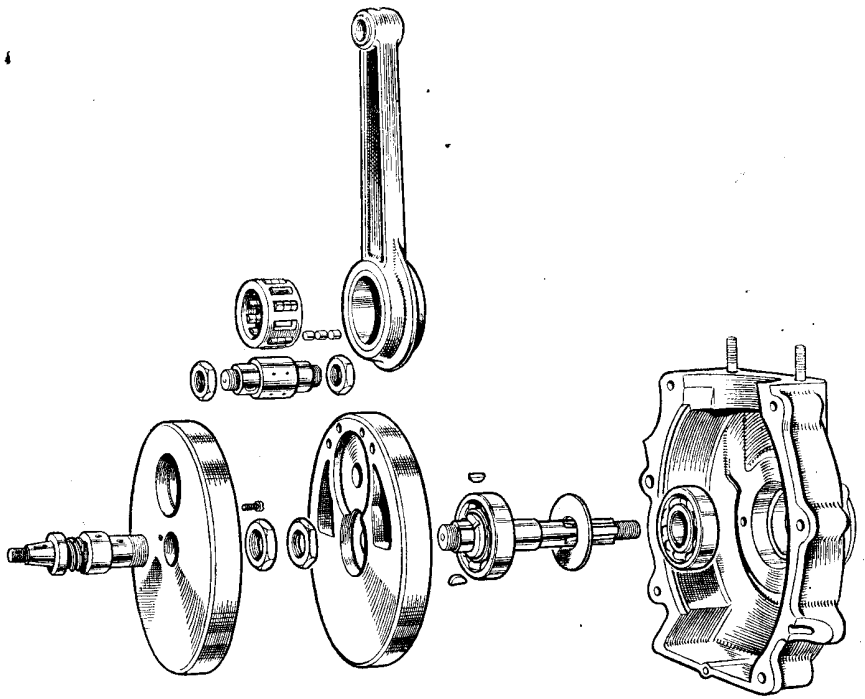

Illustration 9

Flywheel assembly

VALVE GRINDING

Before commencing valve grinding, carefully examine the face of each valve and, if found to be deeply pitted, have them refaced. (Most garages have suitable equipment for that purpose.) Any attempt to remove deep pit marks by grinding will inevitably cause undue and undesirable widening of the seats.

As a rule, inlet valves require very little attention and one light application of fine grinding paste should be sufficient to restore an even matt finish to both valve face and seat. The exhaust valves may require two, or even three, applications but, as already mentioned, excessive grinding is both unnecessary and harmful.

The grinding is accomplished by smearing a thin layer of fine grinding paste (obtainable ready for use at any garage) on the valve face and then, after inserting the valve in the head, partially revolve, forwards and backwards, while applying light finger pressure to the head, raising the valve off its seat and turning to another position after every few movements. (Never revolve the valve continuously in one direction.)

When the abrasive ceases to bite, remove the valve and examine its face.

The grinding may be considered to be satisfactorily completed when a continuous matt ring is observed on both valve face and seat.

After grinding, all traces of abrasive must be carefully washed off with petrol and a piece of rag, moistened in petrol, should be pulled through the bore of each valve guide to remove any abrasive that may have entered.

A holder for the valve, when grinding in the valve, can be supplied. The part number is 017482.

TO REPLACE THE CYLINDER HEAD

A gasket is fitted between cylinder head and barrel. (*Touring models only*).

The top ends of the push rod cover tubes have rubber gaskets between tubes and head, they are a push fit and metal washers are located between the top edges of the gaskets and the cylinder head recesses. If the cover tubes are pulled away from the head, the gaskets will probably remain in position in the head.

A rubber gland is fitted at the bottom of each cover tube.

Replace the cylinder head by :

Carefully clean the top edge of the cylinder barrel and the under face of the cylinder head.

Fit the cover tubes, with their rubber gaskets and metal washers, into the cylinder head.

Place the cylinder head gasket in position on the top edge of the cylinder barrel.

Place a rubber gland round each tappet guide

Place the cylinder head in position.

Ensure each cylinder head securing bolt has a plain steel washer on it and then replace the bolts and engage each a few turns.

Finally, screw down the cylinder head securing bolts, in turn, bit by bit, until all are fully home.

Replace

The sparking plug, but before doing so it is desirable to coat thread with "Oil Dag" or graphite paste to prevent seizure upon next removal.

The rocker box, carburetter, exhaust system, and the petrol tank.

NOTE—If old gaskets are re-fitted they must be in an undamaged state otherwise new must be used.

Whether new or re-used, the gasket should be annealed just prior to fitting. This is done by heating to "blood red heat" and plunging into clean cold water.

TO REMOVE THE CYLINDER BARREL AND PISTON

Remove

The cylinder head.

The four nuts retaining cylinder barrel to crankcase.

Take away

Cylinder barrel. (Ensure piston is not damaged in doing this. Steady piston with hand as barrel is withdrawn.)

Fill throat of crankcase with clean rag to prevent entry of foreign matter.

Remove

One gudgeon pin circlip. It is immaterial which circlip is removed. Use special pliers included in tool kit.

Gudgeon pin by pushing it out of piston.

Take away piston.

NOTE—The gudgeon pin is an easy sliding fit in both piston and connecting rod small-end bush.

Rings may be removed from a piston by "peeling off" with a knife, or by introducing behind the rings three pieces of thin steel spaced at 120° from each other and then sliding off the rings. (Do not scratch the piston.)

TO REPLACE THE PISTON AND CYLINDER BARREL

All parts must be clean.

Place rings on piston, scraper first then the two compression rings. On all models the top compression ring is chromium plated.

These chrome plated rings have a slightly tapered exterior and when new are clearly marked with the word TOP on one side to indicate assembly position. After use this word tends to become indiscernable, but over a large mileage the assembly position can be determined by brightness of the edge contacting cylinder wall. This bright edge is the lower one. When as the result of wear, contact with the cylinder wall appears uniform over the whole width of the ring, it is then immaterial which way round it is re-fitted.

Smear gudgeon pin with engine oil.

Refit piston by :

Introduce piston over connecting rod, so that slit in piston faces to the front of the machine.

Introduce gudgeon pin in piston and pass it through connecting rod small-end bush and centralise it.

Re-fit circlips. (Use special pliers). Use rotary action when bedding circlips in their grooves and make sure each circlip lies snugly in its groove. This is **essential** otherwise considerable damage will result.

Re-fit cylinder barrel by :

Take new cylinder base washer. Coat one side with liquid jointing compound and apply it to cylinder base.

Smear cylinder bore and piston with clean engine oil.

Space piston rings so that the gaps are evenly spaced at 120° to each other.

Gently fit barrel over piston and carefully compress each ring in turn, with the fingers, as it enters the chamfered mouth of the barrel.

Remove rag from crankcase throat.

Replace cylinder barrel holding down nuts, screwing each down, in turn, bit by bit, till all are fully home.

CAM CONTOUR

On the flanks of the cams are quietening curves which are very slight inclines from the base circles to the feet of the humps.

Therefore, it is necessary to ensure the tappet ends are on the base circles when checking valve clearances and valve timing.

It is for this reason valve clearances must be checked when the piston is at the top of its compression stroke, at which position both tappets are well clear of the quietening curves.

VALVE TIMING, Standard models

taken with valve ·001" off its seat

Inlet valve timing

Inlet valve opens 36° before top dead centre—350 c.c. models.
Inlet valve opens 18° before top dead centre—500 c.c. models.
Inlet valve closes 51° after bottom dead centre—350 c.c. models.
Inlet valve closes 69° after bottom dead centre—500 c.c. models.

Exhaust valve timing

Exhaust valve opens 50° before bottom dead centre—All models.
Exhaust valve closes 30° after top dead centre—All models.

(See page 86 for particulars of special timing disc graduated in degrees.

Camshaft timing marks

Use mark 1 for exhaust cam—all models.
Use mark 2 for inlet cam 500 c.c. touring models.
and all competition models.
Use mark 3 for inlet cam 350 c.c. touring models only.

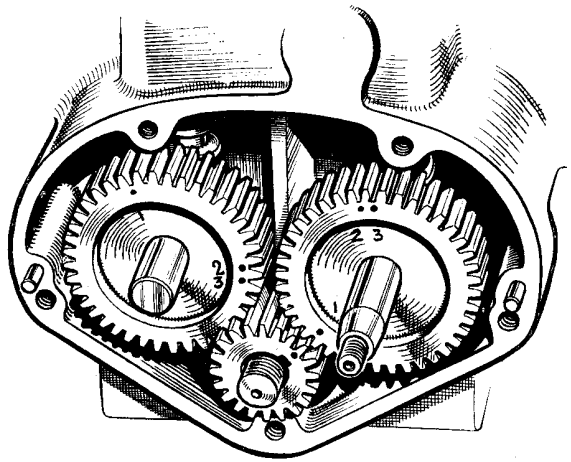

Illustration 10

When checking the valve timing the tappet clearances must be set to ·014 inch so that the tappets may be well clear of the quietening curves of the camshafts.

The timing gears are marked to facilitate their replacement.

To re-set the valve timing, by using the marks on the gears, proceed as follows :—

Turn over the engine till the mark on the small timing pinion is in line with the centre of the inlet (rear) camshaft bush. Insert the inlet camshaft so that the No. 2 or No. 3 mark on it is in mesh with the mark on the small timing pinion, according to model.

Rotate the engine in a **forward** direction till the mark on the small timing pinion is in line with the centre of the exhaust (front) camshaft bush. Insert the exhaust camshaft so that the No. 1 mark on it is in mesh with the mark on the small timing pinion.

VALVE TIMING, Trials models

Inlet opens 26° before top dead centre.
Inlet closes 53° after bottom dead centre.
Exhaust opens 64° before bottom dead centre.
Exhaust closes 25° after top dead centre.
taken with 0·016" tappet clearance and with the valve 0·001" off its seat.

TAPPET ADJUSTMENT

The top ends of the two long push rods have screwed extensions. These are locked in position by nuts, thereby providing tappet adjustment.

The correct tappet clearances, on all models, with valves closed and engine warm (not hot) is **NIL.** This means the push rods should be free enough to revolve and, at the same time, there should be no appreciable up and down play.

Prepare to adjust tappets by :

Set piston to T.D.C. (Both valves closed).

Remove the three nuts, and fibre washers under them, retaining tappet cover to rocker box.

Take away cover.

Adjust tappets on all 350 and 500 models by :

With spanners, hold the sleeve 5, either valve (Illustration 11) and slacken lock nut 2. Then screw, in or out, the head 3 until the clearance is nil.

Tighten lock nut 2 and re-check the clearance.

Illustration 11

Tappet adjustment

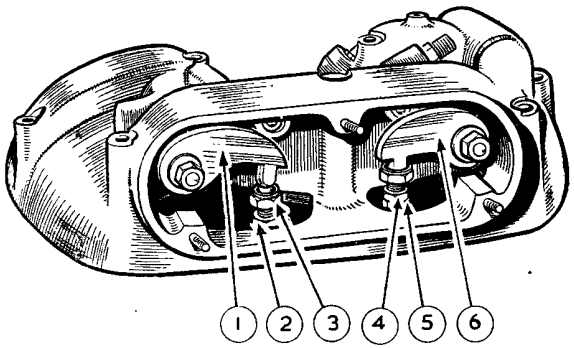

Finally

Check adjustments so that, with no up and down movement, the long push rods are free to revolve when the valves are closed.

1. INLET ROCKER ARM (TAPPET END).
2. NUT, LOCKING ADJUSTING CUPPED SCREW.
3. CUPPED ADJUSTING SCREW.
4. CUPPED ADJUSTING SCREW AND LOCK NUT.
5. SLEEVE, TO ACCOMMODATE ADJUSTING SCREW, ON TOP END OF PUSH ROD.
6. EXHAUST ROCKER ARM (TAPPET END).

Complete adjustment by :

Replace rocker tappet cover taking care to replace the fibre washer that is under each retaining nut.

As mentioned elsewhere do not over-tighten the nuts because the joint is made with a rubber fillet and undue pressure is not necessary.

NOTE—In normal conditions tappet adjustment should not be necessary more frequently than about every five thousand miles or after decarbonising and grinding valves. If adjustment is found necessary more frequently the cause should be investigated at once.

The tappet rods are made of Light Alloy, and in manufacture, the sleeve marked 5 in illustration 11 is fitted to the bare rod and then the push sleeve and the rod are threaded to take the adjusting screw marked 3.

It will consequently be seen that, contrary to the practice when steel rods are used, it is not possible to supply and fit sleeve 5 to an existing Light Alloy rod.

Consequently the " Push Rod, bare " will only be supplied for spares purposes complete with sleeve 5 already fitted and threaded.

TO RE-TIME THE IGNITION

The normal advance is 39° ($\frac{1}{2}$").

Have available a stout screwdriver, or an old type tyre lever with turned up end, also a small rod or stout wheel spoke $5\frac{1}{2}$" long.

Before setting the ignition firing point it is essential the magneto contact breaker points are correctly adjusted. Therefore always check these first.

Check contact breaker points by :

Expose contact breaker by removing moulded end cover of magneto (secured by 3 captive screws).

Check setting of contact breaker points. and, if necessary, re-set same.

Set ignition firing point by

Remove :—

The sparking plug high tension cable from plug.

The sparking plug.

The magneto chain case cover.

The rocker box side cover.

Unscrew, several turns, nut retaining magneto sprocket to camshaft. (No need to remove nut).

Lever off sprocket until it is loose on the taper of the shaft. (Use stout screw-driver or old type tyre lever.)

Turn over engine till both valves are closed.

Insert rod through sparking plug hole, feel piston, by rocking engine forwards or backwards till it is felt the piston is at the top of its stroke with both valves closed.

Mark rod flush with top face of sparking plug hole. Remove rod and measure $\frac{1}{2}$" above the flush mark and record position on rod.

Turn the front plate of the automatic unit with the fingers and thumb to its limit of movement and insert a wood wedge to hold the control in the fully advanced position.

Replace rod in sparking plug hole.

Slightly rotate engine **BACKWARDS** until upper mark on rod is flush with top face of sparking plug hole. (To rotate engine, engage top gear and turn back wheel by hand.) Rotate sprocket on magneto armature shaft, in anti-clockwise direction (as seen from sprocket end of magneto), till the contact breaker points are just about to separate. (To find the exact moment for the commencement of the point separation, place a piece of tissue paper between the points and turn the armature shaft (by the sprocket on it) until the paper is just released, and no more, upon a gentle pull.)

Tighten nut on camshaft and ensure engine, and/or magneto shaft, does not move in doing so.

Re-check the setting which must be $\frac{1}{2}$" before top dead centre. (With the ignition fully advanced.)

Do not omit to remove the wood wedge securing the automatic unit in the fully advanced position before refitting the chain cover.

See page 86 for particulars of special timing disc graduated in degrees.

Replace

Rocker box side cover, magneto side cover, magneto chain case cover, sparking plug (see note on page 34 re graphite on sparking plug thread), and sparking plug wire.

TO REMOVE AND REPLACE THE OIL PUMP PLUNGER IF AND WHEN NECESSARY ONLY

Remove

Lower end of rocker box oil feed pipe by unscrewing union nut.

Both oil pump end caps.

Oil pump plunger guide screw with pin. (See illustration 12.)

Oil pump plunger, by pushing at front and extracting from rear end of its housing.

Replace by :

Reversing above procedure.

NOTE—Remember there is a paper washer under each oil pump end cap and, when fitting a new paper washer to the front cap, ensure the oil passage in the front cap is not obstructed by the paper washer.

Important

Never attempt to insert the guide screw unless both oil pump end caps are removed, when by moving the pump plunger to and fro with the fingers it can be felt when the pin engages with the groove in the plunger. When correctly fitted the shoulder on the screw will abut against the boss into which it fits. (See illustration 12.)

Do not under any circumstances revolve the engine until quite certain that the pin is correctly positioned otherwise damage will inevitably result.

Securely tighten the screw to prevent any possibility of it unscrewing in use.

Under no circumstances must either the pump plunger or guide screw be disturbed in ordinary routine maintenance.

OVERSIZE PARTS AND RE-BORING CYLINDER BARREL

Pistons and rings, .020″ and .040″ larger than standard, are available. These degrees of oversize make it essential for the cylinder barrel to be re-bored to accommodate them. We can provide that service at prices quoted in the Spares List.

On the 350 c.c. the cylinder standard bore is 2.7187 ± .0005″. The 500 c.c. cylinder standard bore is 3.250 ± .0005″.

When the wear at the top of the barrel reaches .008″ the barrel should be bored out .020″ oversize and a new oversize piston and rings fitted.

Crankpin rollers .001″ larger than standard can be supplied. We recommend only skilled mechanics should fit these because it is almost general that the big-end journals and sleeves require " lapping " to ensure a correct fit.

REMOVING SPARKING PLUG

Always exercise the greatest care to avoid thread seizure when removing a sparking plug. If any resistance is felt, apply paraffin. Before replacing plug, it is desirable to coat the thread with "Oil Dag" or Graphite paste. This will guard against seizure upon subsequent removal.

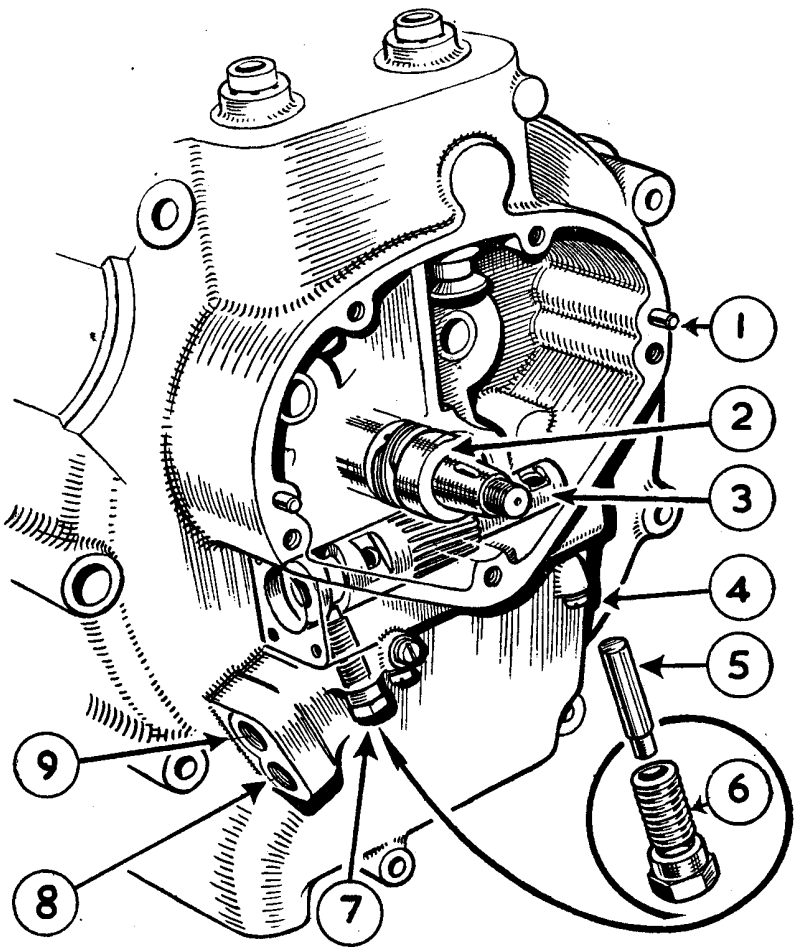

Illustration 12

The rotating oil pump plunger is here shown in situ, together with the guide screw which registers in the plunger profiled groove, thereby providing the reciprocating movement

1 DOWEL PEG, LOCATING TIMING GEAR COVER.

2 TIMING SIDE FLYWHEEL AXLE WITH INTEGRAL GEAR FOR DRIVING OIL PUMP PLUNGER.

3 OIL PUMP PLUNGER.

4 SCREW (ONE OF THREE) WITH FIBRE WASHER, PLUGGING OIL PASSAGES CAST IN CRANKCASE.

5 GUIDE PIN, FOR OIL PUMP PLUNGER. INSERTED RELIEVED TIP DOWNWARD AS SHOWN.

6 SCREWED BODY TO ACCOMMODATE THE OIL PUMP PLUNGER GUIDE PIN.

7 BODY, WITH GUIDE PIN IN POSITION ENGAGED IN PROFILED CAM GROOVE OF OIL PUMP PLUNGER.

8 TAPPED HOLE, FOR PIPE FEEDING OIL TO OIL PUMP.

9 TAPPED HOLE, FOR PIPE RETURNING OIL TO OIL TANK.

CARBURETTER SERVICE

The information given in this section includes all that will normally be required by the average rider. For further details, particularly those connected with racing and the use of special fuels, we refer the enquirer to the manufacturers of the carburetter, **Amal Ltd., Holford Road, Witton, Birmingham, 6.**

Our **Spare Parts Department** does not stock every part of the carburetter but confines its stock to those parts that, from time to time, may be required. Those parts include floats and float needles, jet taperneedles, needle jets, pilot jets, main jets and all washers.

CARBURETTER FUNCTION

The petrol level is maintained by a float and needle valve and, in no circumstances, should any alteration be made to these parts. In the event of a leaky float, or a worn needle valve, the part should be replaced with new. (Do not attempt to grind a needle to its seat.)

The petrol supply to the engine is controlled, firstly, by the main jet and, secondly, by means of a taper needle (see Illustration 13) which is attached to the throttle valve and operates in a tubular extension of the main jet.

The main jet controls the mixture from three-quarters to full throttle, the adjustable taper needle from three-quarters down to one-quarter throttle, the cut-away portion of the intake side of the throttle valve from one-quarter down to about one-eighth throttle, and a pilot jet, having an independently adjusted air supply, takes care of the idling from one-eighth throttle down to the almost closed position. These various stages of control must be kept in mind when any adjustment is contemplated. (See Illustration 13, for location of the pilot jet air adjustment screw.) The pilot jet, unlike on earlier models, is now detachable for cleaning purposes.

The size of the main jet should not be altered save for some very good reason. See "DATA" for details of standard sizes of jet, throttle valve, and jet taper needle. With the standard setting it is possible to use full air in all conditions, except, perhaps, when the engine is pulling hard up hill or is on full throttle, when some benefit may be obtained by slightly closing the air control.

Weak mixture is always indicated by popping, or spitting, at the air intake.

A rich mixture usually causes bumpy, or jerky, running and, in cases of extreme richness, is accompanied by the emission of black smoke from the exhaust.

CARBURETTER ADJUSTMENT

With the taper needle projection, main jet size, and type of throttle slide specified (see page 6) correct carburation except at idling speed is assured.

In the event of difficulty being experienced look for cause under heading Useful Information, pages 78 and 79.

To check for correct idling mixture, first run the engine until it is just warm but not hot when with the throttle nearly closed and air fully open it should fire evenly and slowly.

If it fails to do so, first of all make certain that the sparking plug is clean and the point setting correct. Having done this and idling is still uneven try resetting the pilot jet air screw.

Adjustment of this air screw is not unduly sensitive and it should be possible to obtain the correct setting for even firing in a few seconds.

In the event of even firing at idling speed being unobtainable by adjustment of the air screw look for obstruction in the pilot jet.

Having obtained even firing all that remains is to adjust if necessary the position of the throttle stop screw, until the desired idling speed is obtained.

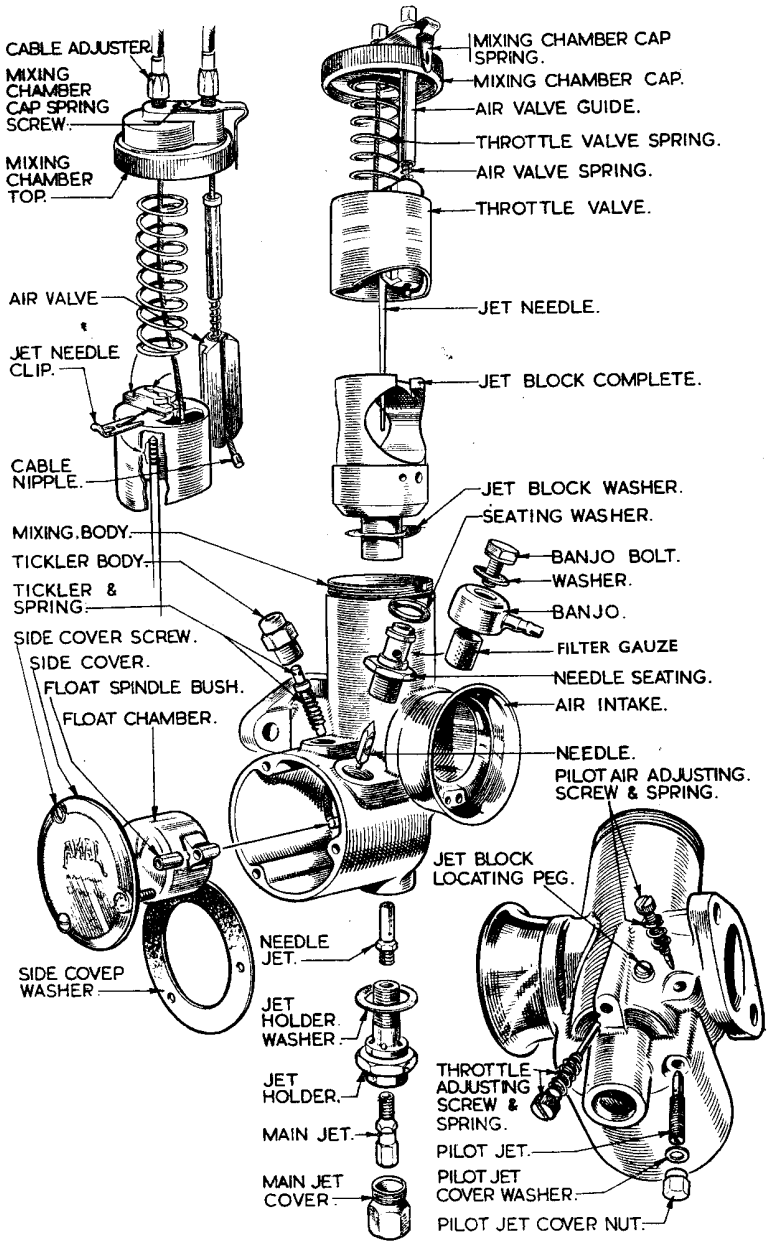

Illustration 13

Carburetter details in assembly order

TWIST GRIP ADJUSTMENT

A screw is provided in one of the halves of the twist grip body to regulate the spring tension on the grip rotating sleeve. This screw, which is locked by a nut, must be screwed nto the body to increase the tension.

The most desirable state of adjustment is that when the grip is quite free and easy to operate but, at the same time, will stay in any position in which it is placed.

The complete twist grip can be moved on the handlebar by slackening the two screws that clamp together the two halves of the body. The most desirable position is that in which the throttle cable makes the cleanest and most straight path to the under-side of the petrol tank.

Smooth throttle operation is assured by the provision of a cable oil nipple. At the first signs of jerky action a little engine oil should be injected, applying the gun as near vertical as possible (nozzle downward).

AIR FILTER

In locations, such as the United Kingdom, where the roads and atmosphere are particularly free from dust, it is not considered necessary to have an air filter fitted to the carburetter, but in countries where the atmosphere contains a very heavy dust content, an air filter is essential in order to prevent abrasive wear.

The filter available (optional extra) for the conditions mentioned above is of the "Oil Wetted" type, and this requires periodical servicing.

When servicing the air filter, withdraw the filter element. Thoroughly wash this in petrol, paraffin or other suitable solvent and allow to dry. Then re-oil, using one of the light oils (SAE-20), enumerated in the final table on page 14, and allow to drain before replacing in the filter case. Clean regularly at intervals of 1,000 miles, and renew the element every 10,000 miles.

TO REMOVE THE AIR FILTER ELEMENT

Pull the rubber hose off the carburetter air intake.

Remove the frame cover and pull off the hose end from the air filter.

Remove the bolts securing the filter to the oil tank and withdraw the entire filter unit.

The filter element is held in its cage by bolts and nuts and lock washers. After cleaning, replace the filter. When the hose is replaced on the filter make sure that it is properly located. The end of the hose is split along the edge of the lip, and the neck of the filter unit slips into this groove.

CARBURETTER TUNING INFORMATION

Poor idling may be due to :

Pilot jet not operating correctly (partially choked) or incorrect air supply.
Air leaks. Either at junction of carburetter and inlet port, or by reason of badly worn inlet valve stem or guide.
Faulty engine valve seatings.
Sparking plug faulty, or its points set too closely.
Ignition advanced too much.
Automatic ignition unit faulty.
Contact breaker points dirty, pitted, loose, or set too closely.
High-tension wire defective.
Rockers adjusted too closely.

Heavy petrol consumption may be due to :

Late ignition setting.
Automatic ignition unit faulty.
Bad air leaks. Probably at carburetter joint.
Weakened valve springs.
Leaky float. (Causing flooding.)
Taper needle extension insufficient.
Poor compression, due to worn piston rings or defective valve seatings. (Test compression with throttle wide open.)

TRANSMISSION SERVICE

THE GEAR BOX

The gear box provides four speeds and has a positive foot change, operated by the right foot and a kick-starter.

It is retained to the frame by being clamped between the two engine rear plates by two bolts. The bottom fixing bolt acts as a pivot. The top fixing bolt passes through the gear box top lug and the rear plates, which are slotted, thereby allowing a swinging fore and aft movement of the gear box to enable the front driving chain to be adjusted. That movement is controlled by an adjusting bolt (marked (1) in illustration 16) secured in an eye bolt (marked (2) in illustration 16) and locked in the required position by a nut (marked (3) in illustration 16).

Illustration 14 clearly shows the general internal gearbox layout, the simple gear selection and kickstarter mechanism. It will be seen that movement of the foot change lever causes movement of the cam barrel through the medium of an ingenious trip fork to which the lever is attached.

This cam movement actuates the sliding gear striker forks causing movement of the sliding gears which engage the stationary gears by dogs. As each gear is selected it is held in engagement by means of a spring loaded conical ended plunger operating in depressions on the end of the cam barrel.

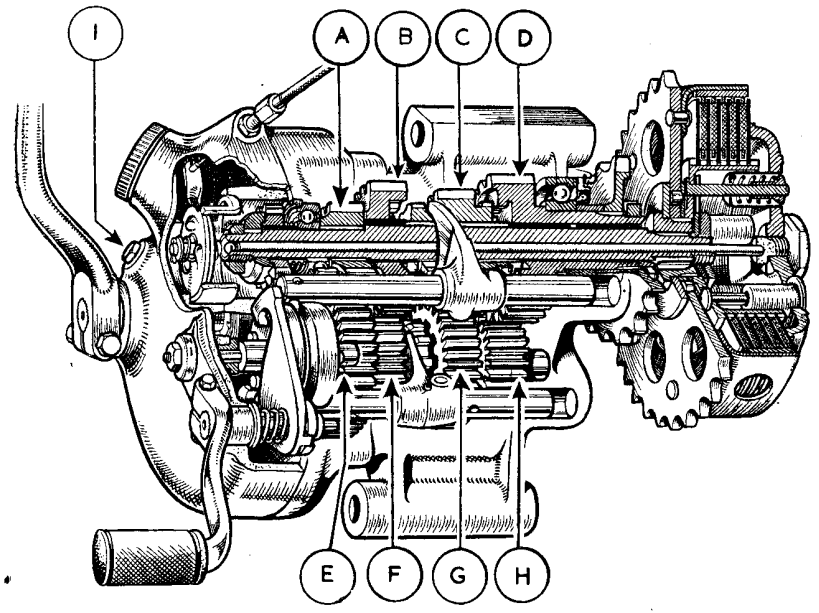

Illustration 14

A LOW GEAR ON MAINSHAFT
B THIRD GEAR ON MAINSHAFT
C SECOND GEAR ON MAINSHAFT
D MAIN DRIVING GEAR
E LOW GEAR ON LAYSHAFT
F THIRD GEAR ON LAYSHAFT
G SECOND GEAR ON LAYSHAFT
H SMALL PINION ON LAYSHAFT
I OIL LEVEL PLUG

Section through gearbox showing gears and clutch with actuating mechanism

The trip mechanism referred to allows the foot change lever to return to its normal position, upon foot pressure being released, in readiness for the next change of gear. Downward direction of movement causes engagement of higher gears and upward movement with the toes causes a lower gear to become engaged.
As mentioned elsewhere an external marked disc shows at a glance which gear (or neutral), is engaged.
The unusual method of clutch operation should be noted, the necessary thrust rod movement to free being obtained through the medium of three balls operating on inclined planes (see illustration 15).
Operation of the clutch handlebar lever moves clutch operating lever B causing inward movement of the thrust rod by reason of the three balls mounting the inclined planes in which they are located. The resulting inward movement of the clutch thrust rod forces out the pressure plate, normally maintained in contact with the friction plates by the springs E, thereby allowing the engine to drive the clutch sprocket D without imparting drive to the mainshaft C.
Consequently no power is transmitted to the rear wheel, the clutch is said to be "out" or "free." Upon releasing the clutch handlebar lever the clutch operating lever returns to its normal position by the pressure of the spring forcing the balls down these inclined planes thereby allowing the spring pressure through the medium of the pressure plate to be transferred to the friction plates which causes the gear box mainshaft to revolve and impart driving power to the rear wheel.

TO REMOVE KICK-STARTER CASE COVER FOR EXPOSURE OF K.S., GEAR CHANGE AND INTERNAL CLUTCH ACTUATING MECHANISM

Remove oil drain plug and drain off oil contents of the gear box.
Remove the large oil filler plug and slack off the clutch cable adjuster sufficiently to permit the cable end to be detached from the slotted end of the internal clutch operating lever which is exposed by the removal of filler cap.
Unscrew the clutch cable adjuster until it is free from the K.S. case cover and withdraw the cable nipple through the adjuster hole.
Remove the nut and small spiral spring securing small gear indicator disc from the cam barrel spindle.
Next remove the five cheese head screws by which the K.S case cover is secured to the gear box end plate.
Withdraw the cover about $\frac{1}{2}$ inch, holding the K.S. pedal firmly while doing so.
Now swing the K.S. crank round until it can be tied to the foot change lever. This prevents the K.S. return spring unwinding and facilitates re-assembly.
The entire cover can now be removed
Re-assemble in exactly reverse order, taking care to avoid damage to the paper joint gasket.
NOTE—The position of the various cheese head screws securing the K.S. case cover are as follows :—
In the top position, screw measuring $3\frac{1}{8}$ inches under head.
In the bottom position, screw measuring $2\frac{7}{8}$ inches under head.
In the rear position, screw measuring $\frac{7}{8}$ inch under head.
In the front position, top screw measuring $1\frac{1}{8}$ inches under head.
In the front position, bottom screw measuring $1\frac{3}{8}$ inches uuder head.

TO REMOVE GEAR BOX END PLATE FOR EXAMINATION OF GEARS

Remove K.S. case cover as already described.
Remove split pin securing both gear striker shaft pins and withdraw the pins and also the cam barrel in which they operate together, with the spring loaded conical ended plunger which engages depressions on the underside of the cam barrel.
Remove the mainshaft end nut and draw off the K.S. ratchet driver, pinion, spring and bush upon which the pinion is mounted.
Remove the three cheese head screws by which the end plate is secured to the gear box shell and the end plate is then free to be withdrawn leaving the gears and gear striker shafts in situ.
Take care to avoid losing the steel ball fitted in the end of the mainshaft and interposed between the clutch actuating lever and the clutch thrust rod.

TO RE-ASSEMBLE

If gears have been disturbed insert them in their proper order with slider shafts in correct location and apply end plate with paper joint gasket in position.
Re-fit the three cheese head screws and firmly tighten down with a stout screwdriver.
Then insert conical ended plunger and spring and apply the gear selection cam barrel with any one of the depressions on its underside engaging with the conical end of the spring loaded plunger.
Next insert the selector shaft pins and secure each in position with its split pin.
Complete the assembly in reverse order of dismantling ascertaining, before applying the K.S. case cover, that the ball is inserted in the end of the mainshaft.
Fill to correct level with one of the recommended oils and lastly re-fit the gear indicator disc and adjust its position to give correct indication of gears.

TO REMOVE FRONT CHAINCASE AND CLUTCH ASSEMBLY

To remove outer half of front chaincase
Place tray under chaincase to catch oil.
Remove left side footrest arm.
Remove screw binding chaincase metal band at its rear.
Remove metal band.
Remove endless rubber band.
Remove nut and washer, in centre of chaincase front.
Take away outer half of chaincase.

TO REMOVE FRONT DRIVING CHAIN AND CLUTCH ASSEMBLY COMPLETE

Unscrew the nuts retaining the clutch springs, using end of spanner Part No. 017254.
Take away the clutch spring pressure plate with the clutch springs and clutch spring cups, and flatten the turned up part of the lock plate that is under the large central nut.
Remove front chain connecting link and take away chain.
Engage top gear, apply rear brake, and unscrew nut retaining the clutch centre to the gear box mainshaft sleeve.
Remove the lockplate and plain washer from gear box mainshaft.
Remove complete clutch assembly by pulling it away, as one unit from gear box mainshaft.
Take care not to lose any of the twenty-four clutch sprocket bearing rollers which may be displaced when the clutch centre and sprocket assembly is withdrawn from the mainshaft. The clutch centre is a sliding fit on the mainshaft sleeve and an extractor should not be required.

TO REMOVE DYNAMO CHAIN AND BACK HALF OF CHAINCASE

Remove engine sprocket nut and withdraw shock absorber spring, cupped washer and cam.
Remove the spring lock ring on dynamo sprocket retaining nut.
Take away lock washer surrounding dynamo sprocket nut.
Apply spanner (017254, included in tool kit) to the two flats on the back of the dynamo sprocket and, holding same, unscrew the nut retaining the dynamo sprocket. Holding sprocket thus relieves the dynamo shaft of bending strain.
Release dynamo sprocket with suitable extractor.
Take away, as one assembly, the dynamo sprocket, dynamo chain and engine sprocket assembly. (The dynamo chain is "endless.")
Straighten tabs on lock washers under the three bolts retaining the back half of chaincase to the boss on the crankcase and remove the three bolts.
Remove wide nut and washer on centre fixing bolt, when back half of chaincase can be taken away.

TO RE-FIT THE FRONT CHAINCASE AND CLUTCH

Fit back half of front chaincase by :

Place on face of crankcase boss and back face of chaincase some liquid jointing compound, "Wellseal" recommended.

Ensure the spacer is in position on the centre fixing bolt. This is located between the engine plate and the chaincase. (It is 1-13/32" long.)

Place in position rear half of front chaincase.

Fit to crankcase boss the three lock washers and bolts retaining case to boss.

Fully tighten the three bolts and turn up the tabs of the three lock washers.

Fit spacer nut (inside chaincase, $\frac{7}{8}$" long) and washer to the centre fixing bolt and fully tighten.

Fit dynamo sprocket and chain and engine sprocket by :

Ensure dynamo sprocket key is in position (in dynamo armature shaft.)

Ensure the spacing collar, which fits between crankcase ball bearing and the back of the engine sprocket, is in position on the driving side flywheel axle.

Take dynamo driving chain and place it round the small sprocket of the engine sprocket assembly and the sprocket that fits on the dynamo shaft and fit these three parts, in one movement, to the driving side flywheel axle and the dynamo shaft.

Fit the dynamo shaft plain washer and sprocket retaining nut, screwing nut with fingers only.

Hold the dynamo sprocket by applying spanner 017254 to the flats on the back of the sprocket and fully tighten the sprocket retaining nut. (This holding relieves the dynamo shaft of all bending and twisting strains while the sprocket retaining nut is being securely tightened.)

Fit the dynamo sprocket retaining nut lock washer and lock ring. Ensure the lock ring lies snugly in the groove cut in the nut.

Fit engine shock absorber cam, spring, cap washer and retaining nut but do not fully tighten nut.

Fit the clutch centre and sprocket by :

Place on the gear box main shaft splined sleeve the thicker of the two clutch sprocket roller bearing retaining washers.

Place on the gear box main shaft splined sleeve the clutch sprocket roller bearing ring.

With grease, stick in place on the bearing ring the twenty-four clutch sprocket bearing rollers.

Introduce clutch sprocket over the rollers.

Place on the gear box main shaft splined sleeve the thin clutch bearing retaining washer.

Push on the splined sleeve the clutch centre hub.

Fit the plain washer, lock plate and nut that retains the clutch centre but do not fully tighten the nut.

Fit the front chain and lock the clutch centre nut by

Replace the front driving chain. Ensure the spring connecting link is fitted so that the closed end of the spring clip faces the direction of rotation.

Engage top gear, apply the rear brake and then fully tighten the nut that retains the clutch centre to the gear box mainshaft.

Turn up the edge of the lock plate so that it tightly abuts against a flat of the nut.

Fit the clutch plates and springs by

Slide into position, in the clutch case attached to the clutch sprocket, a steel plain clutch plate.

Slide into place a clutch friction plate (plate with fabric inserts) and follow with a steel plain plate, then another friction plate and so on, alternatively, till all plates are fitted. (Five plain plates and four friction plates on 350 c.c. ; six plain, and five friction on 500 c.c. and all competition models.)

Drop into the spring pressure plate the clutch spring cups.

Show up the spring pressure plate and insert over the studs the clutch springs, retaining each one a few turns, as fitted, with a clutch spring adjusting nut.

Fully tighten the clutch spring adjusting nuts, using end of spanner Part No. 017254.

Slacken back, four complete turns, each clutch spring adjusting nut.

Engage top gear, apply rear brake and then fully tighten the engine shock absorber retaining nut.

Check front driving chain for adjustment

Check dynamo driving chain for adjustment.

Check clutch operarating lever for correct free movement as detailed elsewhere.

Fit outer half of front chaincase by

Ensure faces of both halves of chaincase are clean.

Ensure the rubber and metal bands are clean and undamaged.

After carefully positioning the outer half so that its exterior edge exactly coincides with that of the inner half, apply the endless rubber band.

Fit the metal band, starting at the front end of the chaincase and drawing together the two free ends with the fingers of one hand while with the other hand insert the binding screw.

Whilst slowly tightening this binding screw apply at the same time light taps all round the band exterior using a small rubber mallet.

These light taps will cause the metal band to creep the on rubber to ensure an even all round pressure.

Remove the inspection cap from the chaincase and pour in engine oil to the level of the bottom edge of the inspection cap orifice and then replace the cap.

NOTE—If, after replacing a front chaincase, it is found not to be oil tight, the general reason is distortion of the two joint faces or incorrect position of rubber band. These faces must be undamaged and, on test, should closely fit to a surface plate. They must also be absolutely clean before replacement and the edges must be in exact register, one with the other. Any distortion caused by accidental impact must remedied before refitting.

If any doubt exists, **CHECK** for **DISTORTION BEFORE ASSEMBLY**

CLUTCH SPRING ADJUSTMENT

If clutch slip occurs the most probable cause is either incorrect cable adjustment or absence of free movement of the internal clutch lever. If both are found to be correct the clutch spring adjusting nuts may require adjustment.

To obtain access to clutch spring adjusting nuts, remove the domed clutch cover (secured by eight screws.)

With the slotted driver provided on one of the thin spanners in the tool kit, screw each nut, in turn, fully home, then unscrew exactly four complete turns

Before replacing the domed clutch cover, test for slip by starting up the engine, engaging top gear, and applying the rear brake when it should be possible to pull up the engine on full throttle without slip occurring.

If to cure slip it is found neccessary to further tighten the adjusting nuts this is a clear indication that either the clutch springs have lost their tension, the inserts are so worn that they require renewal or that they have become impregnated with oil.

In the two former instances renewals are necessary, but if oil is the cause of slip this may be rectified by soaking the plates in petrol and allowing to dry off. If inserts are glazed roughen with sand paper.

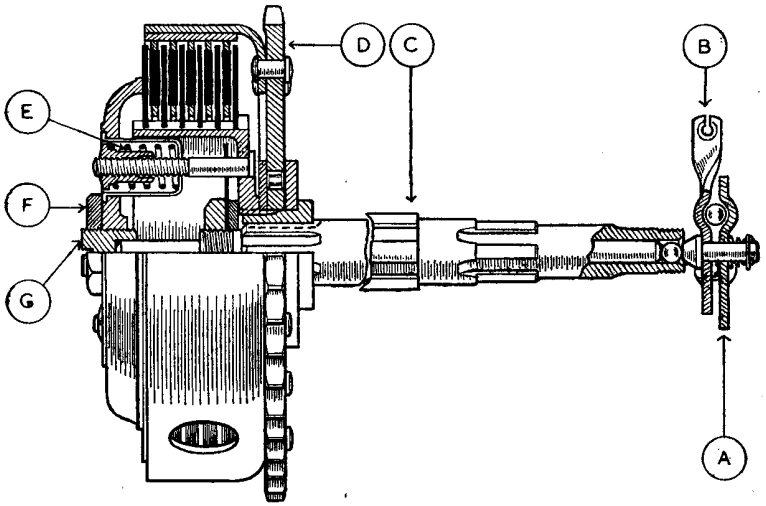

Illustration 15

A FIXED CLUTCH INTERNAL ACTUATING PLATE
B CLUTCH INTERNAL OPERATING LEVER
C GEAR BOX MAINSHAFT
D CLUTCH SPROCKET
E CLUTCH SPRING
F LOCK NUT FOR CLUTCH ROD THRUST CUP
G THRUST CUP (in clutch pressure plate) FOR CLUTCH ROD

Clutch, gear box main shaft and clutch operating mechanism

CLUTCH OPERATING MECHANISM ADJUSTMENT

Correct adjustment of the clutch operating mechanism is of the utmost importance and the following instructions must be carefully observed.

In order to understand the method of clutch withdrawal a study of illustrations 14 and 15 should be made. See also paragraphs 3 and 4, page 40 (Transmission Service).

To enable the clutch to function satisfactorily 1/8″ to 3/16″ free movement of the operating cable is essential. This is checked by lifting the outer casing of the clutch cable at the position where it enters the screwed adjuster on the kick starter case cover. If the adjustment is correct it should be possible to freely move the casing up and down with the fingers 1/8″ to 3/16″.

If the free movement is excessive causing clutch drag or noisy gear changing, adjustment should be made as follows.

Release the clutch cable adjuster lock nut and then screw in the adjuster as far as it will go to ensure that the operating lever B (illustration 15) is in its normal position.

Now turn to the opposite side of the cycle and remove the domed clutch cover secured by eight screws.

Then using the sparking plug box key supplied in tool kit, loosen lock nut F.

Then with a screw driver gently screw in the thrust cup G until contact with the thrust rod can be felt after which unscrew exactly one half turn and then securely retighten the lock nut F taking care to observe that the screwed thrust cup does not also turn while doing so.

Replace the clutch cover and then make the final adjustment by unscrewing the cable adjuster until the recommended free movement of the casing is obtained after which retighten the cable adjuster lock nut.

As a result of wear of the clutch friction plate inserts after prolonged use, the plates tend to close up towards each other. This will have the effect of reducing the free movement in the operating mechanism referred to above.

Clutch slip resulting from lack of free movement will rapidly ruin the inserts and may generate sufficient heat to soften the clutch springs. Therefore should clutch slip develop an immediate check of free movement must be made.

In this case after slacking off the cable adjuster, unscrew the cup G a turn or two and then gently screw in until contact with the thrust rod is felt after which as already detailed it should be unscrewed exactly one half turn before retightening the lock nut F.

Lastly adjust the cable for the specified free movement.

To remove a clutch control cable

Remove the oil filler cap from the kick-starter case cover.

Screw right home the clutch cable adjuster that is located in the top of the kick-starter case cover.

Disengage, from the operating lever, the clutch cable inner wire by operating through the oil filler cap opening.

Completely unscrew the clutch cable adjuster.

Disengage, from the handlebar operating control lever, the clutch inner wire.

Pull cable, by its lower end, till removed from the machine, easing it through the frame cable clips while doing so.

To replace a clutch control cable

Reverse the above instructions and, finally, adjust as detailed earlier.

FRONT CHAIN ADJUSTMENT

Refer to Illustration 16

Remove engine plate cover.

Slacken the nut of bolt (5).

Slacken the nut (3).

Screw bolt (1) in to the crosshead (2) to take up slack in the chain.

Pull on the rear chain to move the gearbox and tighten the front chain.

Remove inspection cap from chaincase and check tension by applying upward pressure, with finger, to the chain.

The correct amount of whip is $\frac{3}{8}$ inch.

Check the adjustment in several positions and adjust for the tightest point.

When the correct adjustment has been obtained, tighten nuts (3) and (5), replace covers.

If the chain is tight, screw the bolt (1) out of the crosshead.

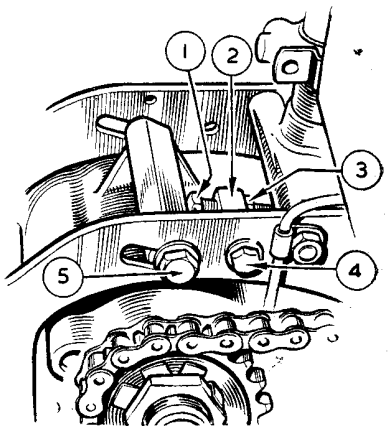

Illustration 16

Front chain adjustment

1. ADJUSTER BOLT
2. CROSSHEAD
3. ADJUSTER BOLT LOCK NUT
4. CROSSHEAD BOLT
5. ENGINE PLATE BOLT

After making adjustments to the front chain always check the adjustment of the rear chain. Slacken or tighten as necessary.

REAR CHAIN ADJUSTMENT

To obtain rear chain adjustment the rear wheel is bodily moved in the rear frame fork ends which are slotted for the purpose. Adjusting screws with lock nuts are provided at each slotted end.

To adjust the chain place cycle on stand and slightly slacken wheel spindle end nut also slightly slacken the brake drum dummy spindle locknut, the hexagon of which is adjacent to the spindle end nut. Then slacken back the adjuster screw lock nut on each side and screw each adjuster bolt in turn further out until the correct chain tension is obtained, taking care to move each side adjusting screw exactly the same amount.

While on the stand the chain whip should be $1\frac{1}{8}$" (see notes below). Then retighten spindle end nut or nuts and also the adjuster screw lock nuts. Chain whip must always be checked midway between the two sprockets and the rear wheel should always be turned to obtain the position of least slackness. This is because rear chains rarely wear evenly and there is usually one position at which the chain is tighter than at any other. It is at this tightest position that the adjustment check should be made.

NOTE—The chain adjustment specified while cycle is on the stand is reduced to $\frac{1}{2}$" when the wheel is on the ground and rider seated. This is due to chain sprocket centres varying slightly as the result of movement of the rear swinging arm.

NOTES ON REAR CHAIN ADJUSTMENT

Before tightening the rear chain always first check front chain adjustment and if attention is necessary adjust the front chain first. This is because adjustment of the front chain disturbs that of the rear chain.

Therefore, after making adjustment to the tension of the front chain, always afterwards check that of the rear chain.

It should also be noted that adjusting the rear chain will disturb rear brake adjustment, which should therefore always be checked subsequently.

REMOVING AND REFITTING REAR CHAIN

To protect the rear chain from mud and water it is very closely shrouded by the chain guard and removing the chain without first detaching the chain guard can present considerable difficulty. A simple procedure however is as follows.

First obtain a piece of thin string about ten feet long.

With cycle on the stand turn the rear wheel until the chain connecting link is at a position near the rear sprocket and remove the connecting link.

Now pass the string through the centre hole of the end link of the top run, draw the two ends of the string level and tie together.

Then pull the bottom run of the chain backwards with one hand while keeping the string taut at the rear end with the other hand.

As the end of the top run of the chain disengages with the gear box sprocket it will leave the string attached lying one strand each side of the sprocket teeth.

When the chain is well clear cut the string one side only at a point about one foot from where it is looped through the chain link.

Leave the string then *in situ* awaiting chain refitting.

To refit the chain.

Pass the longer cut end of the string through the centre hole of the end chain link and then tie the two loose ends of the string together.

Then pull the string from the rear end, at the same time guiding the chain up to engage with the gear box sprocket.

Continue pulling until the chain encircles the rear wheel sprocket, then remove the string and refit the connecting link, taking care while doing so to attach the spring clip with its closed end facing the direction of rotation.

DYNAMO CHAIN ADJUSTMENT

The dynamo armature shaft is eccentric to the body of the dynamo. Therefore, by partially revolving the dynamo in its housing the distance between the two dynamo driving sprockets can be varied, thereby allowing latitude for chain adjustment.

Tighten dynamo chain by :

Remove inspection cap from front chaincase

Slacken dynamo clamping strap bolt.

With the fingers turn dynamo bodily in an anti-clockwise direction till, by passing a finger through the inspection cap opening, it can be felt the chain tension is correct.

The chain whip should be about $\frac{1}{4}$". Ensure, when feeling tension, the front driving chain is not confused with the dynamo chain which lies behind the front driving chain.

Tighten dynamo clamping strap bolt.

Re-check chain tension.

Replace chaincase inspection cap.

MAGNETO CHAIN ADJUSTMENT

The magneto platform hinges on one of its fixing bolts. This provides sufficient movement for adjustment to the magneto driving chain.

Tighten magneto chain by :

Remove magneto chain case cover.

Slacken nut on rear bolt supporting magneto platform.

Insert a screwdriver under that end of the magneto platform and lever upwards until the chain tension is correct.

The chain whip should be about $\frac{1}{4}$".

Tighten nut on platform supporting bolt.

Re-check chain tension.

Place a supply of grease on magneto driving chain and using a broad pen knife blade or thin strip of metal work well into the interior of the auto ignition advance unit a generous quantity of either Mobilgrease No. 2 or Esso Fluid Grease.

Replace magneto chain cover.

ENGINE SHOCK ABSORBER

The engine shock absorber is a spring device for smoothing out the engine impulses.

The engine sprocket is a free fit on the driving side flywheel axle. It has, integral with it, a face cam that engages with a similar face cam ("shock absorber cam") which is keyed to the driving side flywheel axle by splines. A spring keeps the shock absorber cam in close engagement with the cam on the sprocket, and, the shock absorber cam being driven by the engine, over-rides the sprocket cam under the influence of the engine impulses. The shock absorber spring is compressed by the over-riding of the cams, thereby absorbing the shocks.

It is essential the faces of the cams are adequately lubricated otherwise the shock absorbing action will be nullified and this is automatically taken care of, providing the level of the oil in the front chaincase is maintained according to the instructions given in the "Lubrication Section."

The shock absorber spring is retained by a cap washer and a retaining bolt which must be fully tightened.

The dynamo sprocket is integral with the engine sprocket.

Behind the engine sprocket (between the sprocket and the crankshaft ball bearing) is a spacing collar which is a sliding fit on the driving side flywheel axle and in no circumstances must this be omitted.

NOTE—At the first sign of transmission harshness examine front chaincase for correct oil level, and dismantle and lubricate the shock absorber parts if the harshness continues. For access to the shock absorber parts it is necessary to remove the outer half of the front chaincase.

The order of assembly of the engine shock absorber is

1 The spacing collar between the crankshaft bearing and the engine sprocket.
2 The engine sprocket.
3 The shock absorber cam.
4 The shock absorber spring.
5 The cap washer.
6 The retaining nut.

FORK & FRAME SERVICE

STEERING HEAD ADJUSTMENT

The steering head frame races are of the floating self-aligning type and have spherical seats. Therefore they do not fit tightly in the head lug.

Occasionally test the steering head for correct adjustment by exerting pressure upwards from the extreme ends of the handlebars.

It is particularly important that the adjustment is tested after the first one hundred miles because of the initial settling down that always occurs in that period.

Should any shake be apparent, adjust the steering head bearings.

Adjust steering head bearings by :

Jack up the front of the machine so that all weight is taken off the front wheel. (A box under each footrest serves that purpose.)

Slacken the two fork crown pinch screws.

Slacken the domed nut at top of the steering column.

Screw down the nut underneath the domed nut a little at a time (using adjustable spanner 017249) and, while doing so, test the head assembly for slackness by placing the fingers over the gap between handlebar lug and frame top lug, at the same time exerting upward pressure by lifting from the front edge of the front mudguard. Tested in this manner the slightest slackness is discernible.

Continue to tighten the lower adjusting nut until no perceptible movement can be felt and yet the steering head is perfectly free to turn, then tighten down the domed nut in order to lock the adjustment.

Securely tighten the two fork crown pinch screws. (This is very important.)

Remove packing from under footrest.

FRONT FORKS (TELEDRAULIC)

Owing to the unusual construction of the "**TELEDRAULIC**" fork it is desirable to understand what happens in use and, in order to follow clearly the descriptions and subsequent assembly and adjustment instructions, reference to Illustrations 17 and 18 will be necessary.

As will be seen from the general arrangement drawing, Illustration 18, the main members of the forks are two long tubes. These are of heavy gauge and are externally ground to very fine limits. These fork main, inner, tubes are firmly fixed to the handlebar clip lug by the top bolts and are clamped to the fork crown by the clamping screws. Upon the external of these tubes are mounted the springs and sliding members, to which latter the front wheel, mudguards and front stand are fixed.

The telescopic action of the sliders, combined with the hydraulic dampers, described later, explain the word "**Teledraulic,**" coined for the description of the fork.

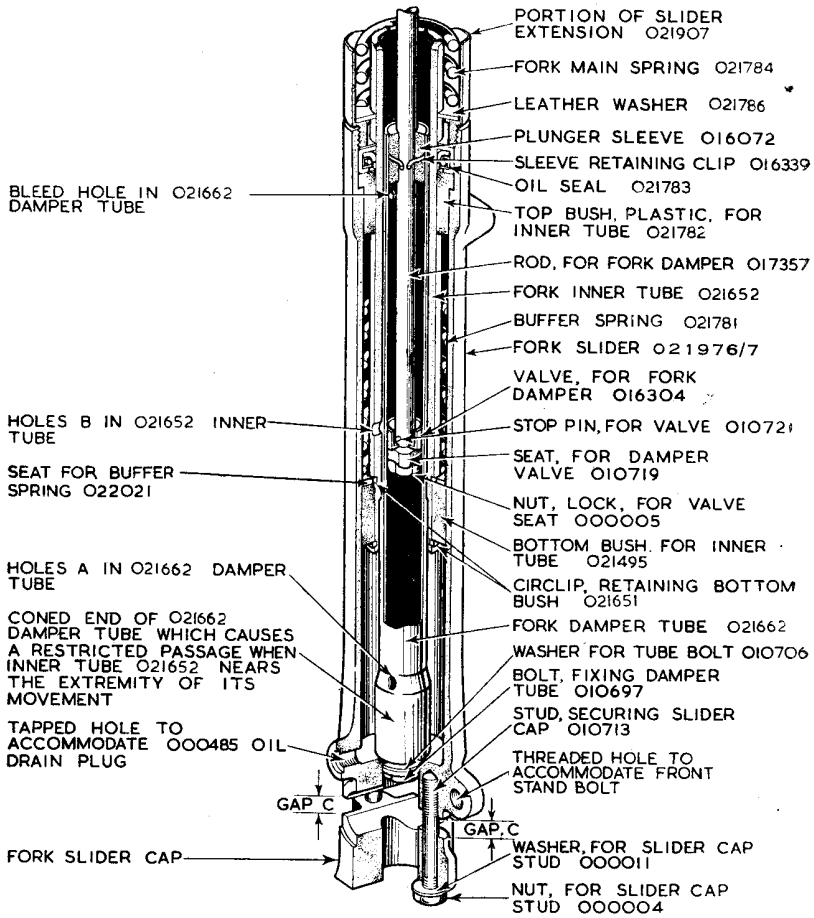

Illustration 17

Introduced in early 1941, for use under strenuous war conditions by all the allied armies, it remains unaltered, except in detail, to this day, and copied practically universally. The hydraulic dampers operate in tubular members located inside the main tubes. As will be seen the aluminium sliding members operate upon steel bushes attached to the bottom ends of the main tubes and also upon bakelite bushes, secured to the top end of the sliders themselves. Above these bushes, an oil seal is fitted, the object of which is to prevent leakage of oil from below into the main spring chamber. The normal level of oil is well above the bottom extremity of the main inner tubes and bearing this in mind, it is at once clear that upward movement of the sliders resulting from impact with road bumps in addition to meeting resistance from the main springs also causes oil to be ejected by the close fitting steel bushes. This oil is forced upward through the open ends of the main inner tubes and also through the holes A (Illustration 17) in the bottom of the damper tubes, then past the damper disc valve which the passing oil raises off its seat. As the oil level rises inside the main inner tubes, air trapped is compressed, thereby forming an air buffer acting as auxiliary to the main springs. This displacement of oil upon impact imposes a certain amount of damper effect, the extent of which increases with the violence of the shock, or in other words, the bigger the bump the greater the damping effect. Upon the recoil movement, the damper disc valve returns to its seat and the oil trapped between this valve and the plunger sleeve above

has no other source of escape but past this sleeve and the adjacent small metered bleed hole. This intentionally restricted passage causes a considerable damper effect to the recoil action. It will thus be gathered that on the shock movement of the fork, slight damper action occurs, with a greatly increased damper action on the reverse movement, both actions automatically increasing in effect the more violent the movement. Before concluding this description, it should be mentioned that upon a very violent impact, as a result of which the main springs are almost fully compressed, the damping of the upward movement of the sliders is intentionally increased by the automatically greatly restricted passage for the displaced oil, brought about by the lower ends of the main tubes encircling the tapered enlarged ends of the damper tubes as the sliders near the limit of their upward movement. Thus bottoming is prevented, no matter how violent the impact. For ordinary purposes the recommended oil content is 6½ ozs. (184·6 c.c.) each leg of one of the S.A.E. 20 oils specified. To deal with heavier loads than normal, the oil content may be increased to a permissible maximum of 10 fluid ozs. (284 c.c.) per leg. To increase damping oil of heavier grade may be used. It will be found, however, that for normal purposes the recommended grade and quantity of oil will give the most comfortable ride.

FRONT FORK "TOPPING UP"

No part of the **TELEDRAULIC** Front Fork requires individual lubrication, but it is advisable to check the oil content, once every five thousand miles. The normal content as already stated, is 6½ fluid ounces (184·6 c.c.) each side.

Support motor cycle vertically with weight on both wheels. A steady under each footrest is the best method.

Remove rubber grommetts and unscrew the top bolts at top of fork inner tubes. These are on level with handlebars and attached to them are the damper rods. Have a graduated measure of not less than 10 fluid ozs. capacity available in which to catch and measure the oil. Remove the drain plug from the bottom of a slider and catch the oil which drains out. Then reinsert drain plug and work the top plugs to which damper rods are attached up and down (pumping action), making upward strokes as violent as possible but using only fingers to do so. This pumping action is to eject any oil trapped in the damper tubes above the damper disc valve. Wait two minutes and again remove drain plug. Repeat the action until no further oil can be drained off when, if the fork had the correct oil content, about 6 fluid oz. (170·4 c.c.) will have been drained off. If less, add to make this quantity, or reduce if an excess quantity has been drained off. Next refit drain plug and carefully pour into the top of the tube being checked exactly 6 fluid ozs. (170·4 c.c.), after which the top plug may be replaced.

NOTE—Although the normal oil content of each side is specified as 6½ fluid ozs., it is not possible to drain all the oil via the drain plug. This explains the lesser quantity of 6 fluid ozs. (170·4 c.c.) referred to above. However, if the fork is at any time completely dismantled and then reassembled in a dry state, it should be noted that in that event the correct quantity of oil to add to each leg is 6½ fluid ozs. (184·6 c.c.).

TO REMOVE THE COMPLETE FRONT FORK ASSEMBLY

Support the machine with the front wheel clear of the ground. (A box, of suitable height, under each footrest is the best method.)

Remove the front wheel as described in Wheel Section.

Remove the front mudguard and stay.

Slaken the screw on headlamp top, gently prise out the rim and reflector assembly, detach with a slight rotary and lifting movement the cap to which headlamp wires are attached and take away rim and reflector assembly.

Gently ease back the rubber sleeves covering the pilot lamp wire snap connectors and pull latter apart.

Remove the nuts on the tubular bolts through which the pilot lamp wires pass which enables the pilot lamps to be taken away, leaving the head lamp shell, etc., free to be gently suspended by the wiring loom.

Disconnect the driving cable from the speedometer head and draw same down through fork crown.

(Continued on page 54)

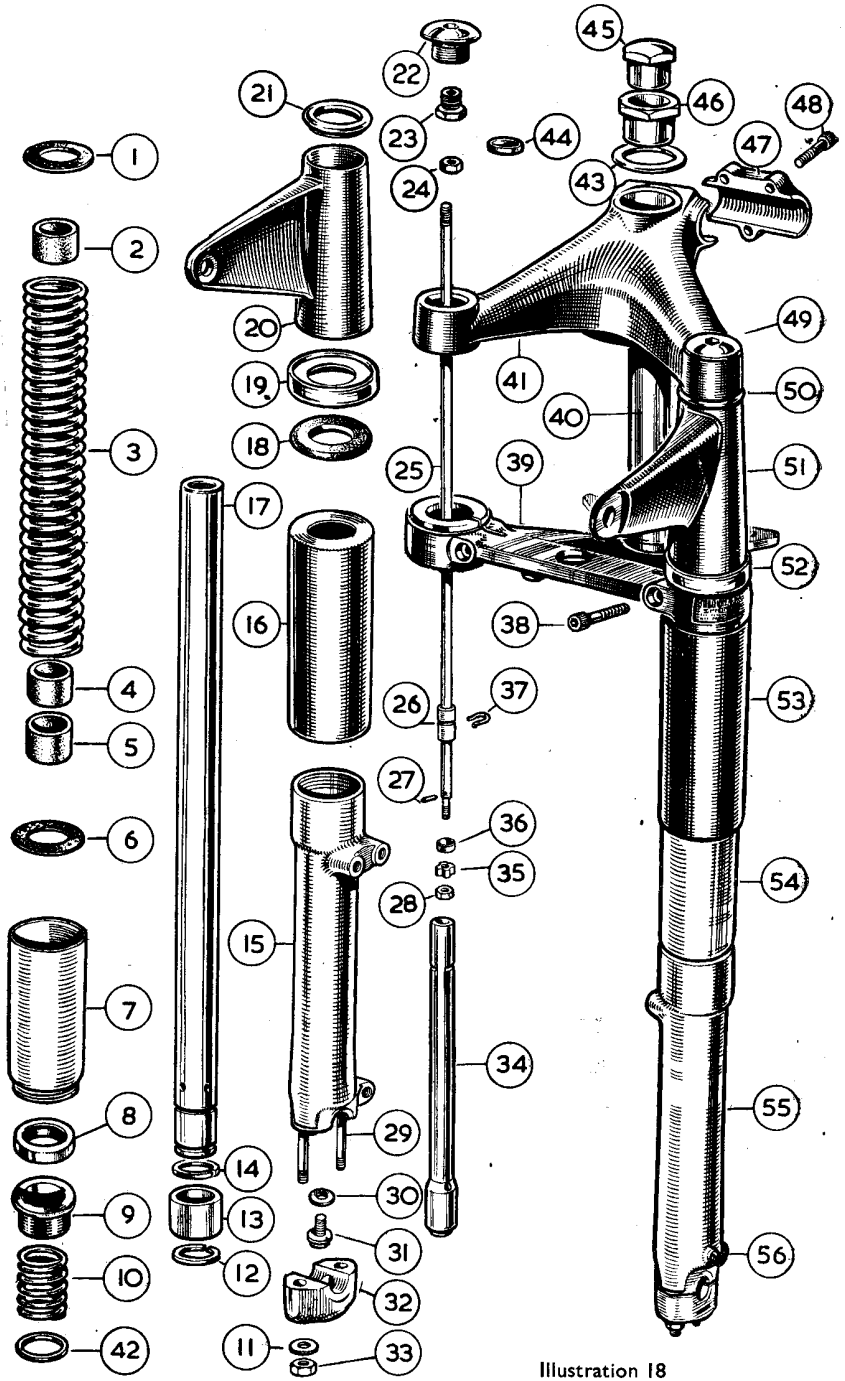

Illustration 18

Exploded view of Teledraulic Forks

REF. NO.	DESCRIPTION
1.	WASHER, LEATHER, FOR FORK SPRING TOP SEATING.
2.	BUFFER, RUBBER, FOR FORK INNER TUBE
3.	SPRING, MAIN, FOR FRONT FORK.
4.	BUFFER, RUBBER, FOR FORK INNER TUBE.
5.	BUFFER, RUBBER, FOR FORK INNER TUBE.
6.	WASHER, LEATHER, FOR FORK SPRING BOTTOM SEATING.
7.	EXTENSION, FOR FORK SLIDER.
8.	OIL SEAL, FOR FORK INNER TUBE.
9.	BUSH, TOP, PLASTIC, FOR FORK INNER TUBE.
10.	SPRING, BUFFER, FOR FRONT FORK.
11.	WASHER, PLAIN, FOR FORK SLIDER CAP SECURING STUD.
12.	CIRCLIP, LOCATING FORK INNER TUBE BOTTOM BUSH.
13.	BUSH, BOTTOM, STEEL, FOR FORK INNER TUBE.
14.	CIRCLIP, LOCATING, FORK INNER TUBE BOTTOM BUSH.
15.	SLIDER FOR FORK WITH STUDS (RIGHT HAND).
16.	TUBE, FORK, COVER, BOTTOM.
17.	TUBE, FORK, INNER.
18.	RUBBER RING FOR TOP COVER TUBE HOUSING RING.
19.	HOUSING RING, TOP COVER TUBE.
20.	TUBE, FORK COVER, TOP, RIGHT, WITH LAMP LUG.
21.	SPIGOT RING TOP COVER TUBE.
22.	BOLT, TOP, FOR FORK INNER TUBE.
23.	ADAPTOR.
24.	NUT, LOCK, FOR TOP END OF DAMPER ROD.
25.	ROD, FOR FORK DAMPER.
26.	SLEEVE, PLUNGER, ON FORK DAMPER ROD.
27.	PIN, STOP, FOR FORK DAMPER VALVE.
28.	NUT, LOCK, FOR DAMPER VALVE SEAT.
29.	STUD, SECURING CAP TO FORK SLIDER.
30.	WASHER, FIBRE, FOR DAMPER TUBE BOLT.
31.	BOLT, FIXING DAMPER TUBE TO SLIDER.
32.	CAP, FOR FORK SLIDER.
33.	NUT, FOR FORK SLIDER CAP SECURING STUD.
34.	TUBE, FOR FORK DAMPER.
35.	SEAT, FOR FORK DAMPER VALVE.
36.	VALVE, FOR FORK DAMPER.
37.	CLIP, RETAINING DAMPER ROD SLEEVE.
38.	SCREW, PINCH, FOR FORK CROWN.
39.	FORK CROWN
40.	STEM, FOR FORK CROWN — NOT SOLD SEPARATELY
41.	LUG, FOR HANDLEBAR AND STEERING HEAD.
42.	COLLAR FOR BUFFER SPRING.
43.	WASHER FOR FORK STEM ADJUSTING NUT.
44.	RING, RUBBER, SEALING, FOR INNER TUBE TOP BOLT.
45.	NUT, LOCK FOR FORK STEM.
46.	NUT, ADJUSTING, FOR FORK STEM.
47.	CLIP (HALF ONLY), FOR HANDLEBAR LUG.
48.	SCREW, PINCH, FOR HANDLEBAR CLIP.
49.	BOLT, TOP, FOR FORK INNER TUBE.
50.	SPIGOT RING TOP COVER TUBE.
51.	TUBE, FORK COVER, TOP, LEFT, WITH LAMP LUG.
52.	HOUSING RING TOP COVER TUBE.
53.	TUBE, FORK COVER, BOTTOM.
54.	EXTENSION, FOR FORK SLIDER.
55.	SLIDER FOR FORK WITH STUDS (LEFT SIDE)
56.	SCREW, PLUG, WITH FIBRE WASHER, FOR FORK SLIDER OIL DRAIN HOLE.

Remove the handlebar half clip and lay the handlebars, complete with controls, upon a pad on top of the petrol tank.

Detach the front brake cable from the forks. (First remove the slotted yoke end and then completely unscrew the cable adjuster.)

Remove the rubber grommetts and top bolts at the top of each inner tube, raise same and slacken the lock nuts securing the damper rods attached. Then, before removing the hexagon plugs, attach a piece of wire about 18 inches long underneath each damper rod lock nut, to enable the damper rods to be raised for reassembly.

Remove domed nut at top of steering column.

Remove lock nut on steering column.

Use a soft mallet to tap upward the handlebar lug until it disengages with the fork stem (steering column) and main tubes. The fork assembly can then be withdrawn. (Take care to avoid loss of any of the 56 steering head steel balls.)

To re-fit a complete front fork assembly

Secure, with grease, 28 balls in fork crown-ball race.

Secure, with grease, 28 balls in main frame top ball race.

Proceed to fit fork assembly by reversing the instructions given above to dismantle, carefully retightening the damper rod locknuts before inserting the hexagonal headed plugs to which they are attached.

TO REMOVE A FORK SLIDER (either side) (Dealers' service only)

Support the motor cycle with the front wheel clear of the ground, and unscrew the tubular slider extension from the slider which it is intended to remove. Special articulated clamp tool required. (Available in workshop tools).

Next remove the front wheel, front stay and mudguard as detailed above. Then with a thin tubular box key, remove the bolt securing the damper tube. The hexagonal head of the bolt is sunk in the upper half of the wheel spindle clamp. Place a receptacle underneath to catch the oil which will drain out upon removing the bolt, and take care of the fibre washer located under the head. A sharp jerk downward should now enable the slider to be withdrawn, but should difficulty be experienced, apply a little heat to the enlarged top end of the slider. This will cause sufficient expansion to release the oil seal which is normally a snug push-in fit, in the top of the slider. The re-assembly is carried out in exactly the reverse order, again if necessary applying a little heat to enable the oil seal to be pushed down into the slider top before screwing in the slider extension. After completion, the oil which has escaped **MUST** be returned via the top. (See Front Fork "Topping up.")

TO REMOVE A FORK INNER TUBE ASSEMBLY (either side) (Dealers' service only)

Remove the rubber grommett, then with the spanner 018667 unscrew the top bolt of the inner tube it is intended to remove. The damper rod will now be partially withdrawn. Slacken the lock nut by which the damper rod is secured to the top bolt, unscrew the bolt and allow the damper rod to fall. It is not necessary to remove the adaptor. Next proceed to remove the slider as already detailed, except do not disturb the bolt securing the damper tube. This damper tube and protruding rod can be removed intact with the slider. Now loosen the fork crown clamping screw when it should be possible to draw the entire inner tube assembly down through the crown lug. Upon re-assembly, the inner tube is first pushed home as far as possible by hand and then pulled right home by screwing down the top hexagonal plug. With this plug tightened down, then proceed to tighten the crown clamping screw, after which the hexagonal plug may be removed and a piece of wire passed down through the inner tube. Loop the bottom end of this wire underneath the damper rod lock nut. The slider is then carefully pushed upward while at the same time pulling on the wire until the top end of the damper rod projects sufficiently to permit the screwed plug to be attached and secured with the lock nut, after which the wire may be removed. It may be found necessary to apply a little heat to enable the oil seal to be pressed home with the fingers before screwing on the tubular extension.

REAR SUSPENSION

The rear wheel is mounted in a fork that is hinged just behind the gear box. The hinge has robust plain bearings lubricated from a reservoir of $1\frac{1}{2}$ fluid ounces (42.6 c.c.) of heavy gear oil which is sufficient to last almost indefinitely. Provision is, however, made for replenishment should same be required. A small screw will be observed in the right-hand end cap of the hinge bearing, upon removal of this screw, oil can be injected into the reservoir, the screw orifice operating as a level control.

On a new machine, or after replenishment, oil may leak from this bearing. This is of no consequence and the leakage will cease after a few hundred miles have been covered.

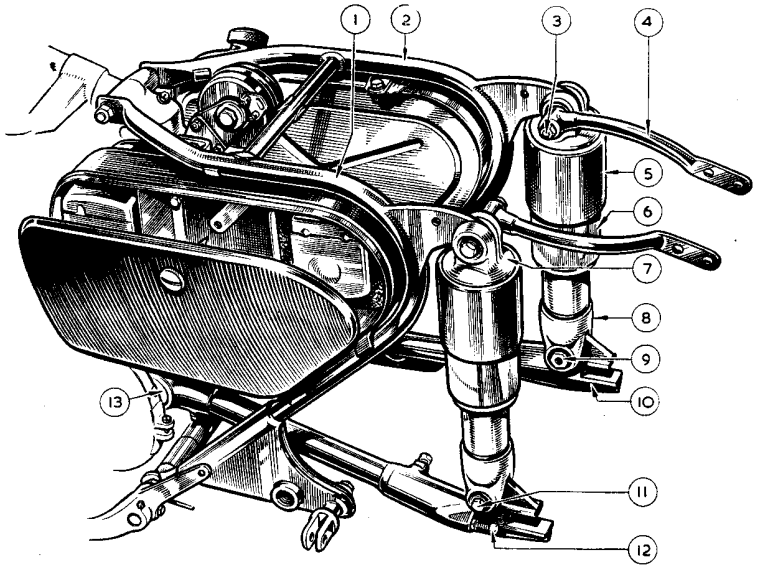

Illustration 19

Rear sprung frame and "TELEDRAULIC" legs

1. MAIN FRAME LEFT LOOP.
2. MAIN FRAME RIGHT LOOP.
3. TOP PIVOT BOLT AND NUT.
4. TUBULAR MUDGUARD SUPPORT.
5. TOP COVER TUBE.
6. BOTTOM COVER TUBE.
7. TOP PIVOT BODY.
8. BOTTOM PIVOT BODY.
9. BOTTOM PIVOT NUT.
10. FORK END.
11. BOTTOM PIVOT BOLT.
12. CHAIN ADJUSTER.
13. FORK HINGE BEARING.

The rear wheel fork is suspended on springs located in the two "TELEDRAULIC" legs joining the rear of the fork to the main frame rear loops, and the spring action is damped by hydraulic dampers identical in design to those used in the "TELEDRAULIC" Front Fork Assembly.

The hydraulic fluid used is one of the grades of oil specified in the Lubrication Section for use in the "TELEDRAULIC" Front Forks.

The recommended quantity for each leg is 85 c.c. or a trifle under 3 fluid ozs. of S.A.E. 20 grade of one of the brands specified. For abnormal loads, or sustained high speed, the next heavier S.A.E. grade may be used, but unlike the front fork, recoil damping as well as maximum load capacity is increased by this alteration of grade alone, and under no circumstances should the oil content of each leg exceed 90 c.c. or roughly $3\frac{1}{8}$ fluid ozs. Unless serious doubt exists as to the correct functioning of the rear legs, owners are advised to leave well alone. Should the need arise, however, the oil content of each leg should be separately checked as follows :

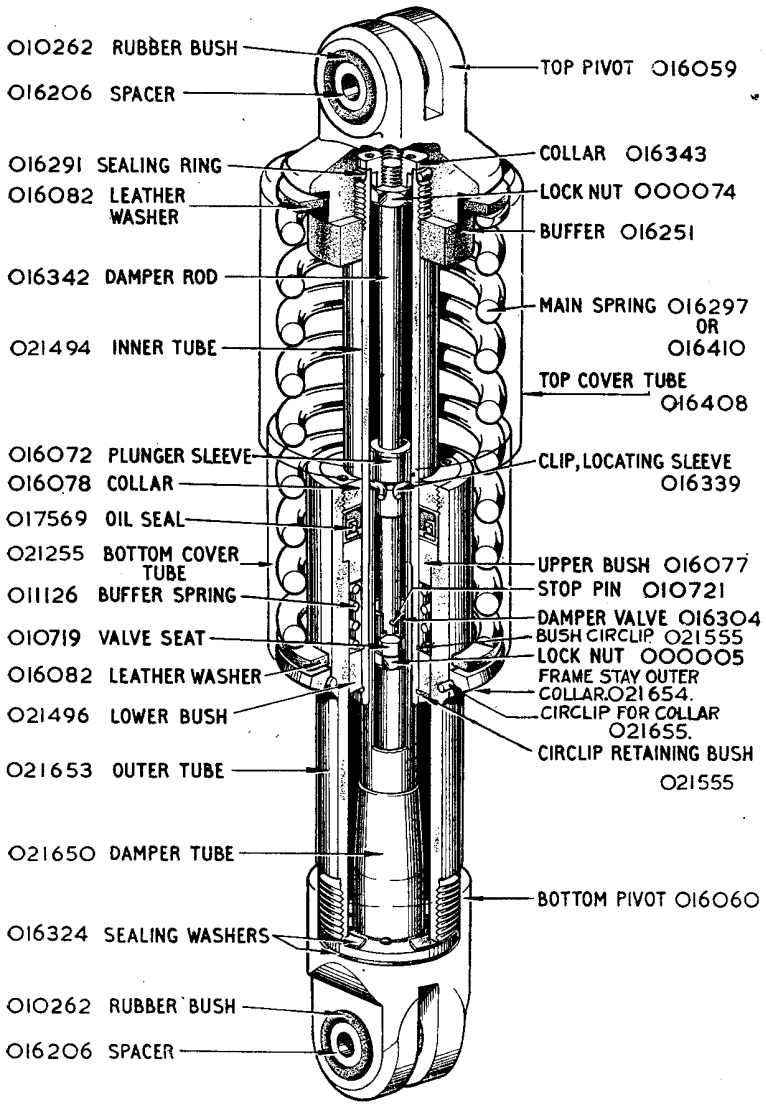

Illustration 20

"Ghost" view of "TELEDRAULIC" leg

To check oil content of "TELEDRAULIC" leg and top-up :

Dealing with one leg at a time, remove top securing bolt, taking care to observe the location of the spacing washers on it. Remove bottom securing bolt and take away the leg.

Using a suitable clamp encircling the outer tube adjacent to the bottom pivot lug, grip in a vice and loosen the pivot lug.

Then holding leg vertically, bottom end uppermost, carefully remove the loosened pivot lug, and gripping the exposed end of the damper tube with the fingers, raise and lower several times (pumping action) after which pour the oil contents into a graduated measure.

It may be necessary to repeat the pumping action to eject oil from underneath the damper valve, and finally the open end of tube should be supported above the measure and left to drain for several minutes.

If the leg contained the correct amount of oil, 75 c.c. ($2\frac{5}{8}$ ozs.) should have been drained out into the graduated measure, leaving 10 c.c. ($\frac{1}{3}$ oz.) which cannot be withdrawn.

All that now remains is to pour carefully back into the leg exactly 75 c.c. ($2\frac{5}{8}$ ozs.) of oil, after which the pivot lug may again be screwed on and securely tightened down to prevent oil leakage when the leg is re-fitted, after which the other leg may be dealt with in a similar manner.

NOTE.—Shortage of oil is evidenced by very lively action.

PROP STAND

The prop stand hinges on a bolt which passes through a lug brazed to the frame and screws into the jaw of the stand leg. It is then locked by a nut and split pin. Care in tightening this bolt is necessary to avoid pinching, and it is essential to observe after securely tightening the lock nut that the stand is perfectly free. Smear the hinge bolt with engine oil before replacing it.

CENTRE STAND

The centre stand is mounted on a bolt set across the bottom rear of the main frame and is removed by taking off a nut of the centre bolt and pushing bolt through the frame. During removal and replacement the stand should be in a horizontal position in order to take off as much of the tension off the return spring as is possible.

TO REMOVE THE REAR CHAIN GUARD

Remove the rear wheel. (See Wheel Section.)

Remove the bolt retaining the front end of the chain guard to the rear fork.

Remove the bolt retaining the rear end of the chain guard to the rear fork. (There is a spacer on this bolt, between the two sides of the guard.)

TO REMOVE THE OIL TANK

Remove the Twinseat

Remove the frame shield. It is held in position by two large knurled and slotted screws.

Remove the oil tank drain plug and empty the tank.

Disconnect the oil feed and return pipes from the bottom of the tank by sliding the rubber connectors down the pipes.

The tank is held in position by four brackets and nuts and bolts, two at the top, one at the front, and one at the back.

Remove the nuts, bolts and washers, lift the tank away from the frame a few inches, and disconnect the vent pipe. The tank is now free. To refit, reverse the foregoing instructions.

WHEELS AND BRAKES

TO REMOVE FRONT WHEEL

Place machine on centre stand.

Remove the split pin, and pin, retaining yoke end of front brake cable to the brake expander lever.

Remove bolt retaining brake anchor stay to brake cover plate.

Slacken the nut on the left-hand end of front wheel spindle.

Remove the four nuts retaining the caps to the fork sliders, which will permit the removal of the two caps and, putting pressure on the front wheel (in order to decrease the effective height of the wheel spindle) the wheel can be withdrawn towards the front.

NOTE—The two caps **MUST** be re-fitted in same order and position as originally. Therefore, lay them aside so that the order and position of assembly will be correctly made.

TO RE-FIT FRONT WHEEL

Holding the left side cap on the wheel spindle, offer wheel up so as to engage the cap with its securing studs. Then apply fixing nuts and washers but only loosely tighten.

NOTE—To pass the wheel spindle into position it may be necessary to apply pressure to flatten the tyre so as to enable the spindle to pass the forward fixing studs.

Next, fit the right side cap and again only loosely tighten the securing nuts. Now attach the brake anchor arm and refit the yoke end pin.

Next fully tighten the nuts securing the left side cap, taking care to keep the gap fore and aft approximately equal. Then tighten the left side spindle nut and lastly the nuts securing the right side cap.

Should any fork stiffness be apparent after re-fixing the front wheel, loosen the nuts securing the right side cap and after working the fork up and down violently, re-tighten.

This action will ensure that the wheel clamp occupies its natural position on the spindle end on which it is intentionally not positioned.

TO REMOVE QUICKLY DETACHABLE REAR WHEEL

Place the machine on the centre stand. Loosen the bolt in the rearmost position on each tubular member to which the detachable rear portion of the mudguard is secured. Also slacken off the two bolts securing the two portions of mudguard together. Disconnect the snap connectors of the rear lamp wire when the rear portion of mudguard is free to be taken away.

Disconnect speedometer drive by unscrewing the cable gland nut and withdrawing drive cable end from the speedometer gear box. Then remove the wheel spindle end nut and washer and withdraw spindle together with distance collar which will fall as spindle is withdrawn. The wheel is now free to be removed.

In refitting it will be found best to offer up the wheel, insert spindle without the distance collar and after engaging the driving pegs hold wheel *in situ*, withdraw the spindle and insert the distance collar.

Upon tightening the spindle end nut make certain the collar end of the spindle is in contact with the chain adjusting screw to ensure correct wheel alignment. Also see that the speedometer gear box is positioned correctly.

TO RE-FIT REAR WHEEL

Reverse the removal procedure, see that the speedometer drive dogs are engaged, but leave the tightening of the nut that locates the speedometer gear box for the final operation, i.e., after the speedometer cable has been re-connected and the exterior axle nuts have been tightened.

After re-fitting the rear wheel, check the rear chain adjustment, and, if necessary, re-set it.

Then check the rear brake adjustment and, if necessary, re-set it. Also check that brake cover plate anchorage is correct (see illustration 22.)

REAR WHEEL REMOVAL, Trials model

Place machine on the centre stand.

Disconnect: speedometer drive; chain; rear brake rod.

Remove wheel spindle nut (21), washer (20), and distance piece (19). Gently tap out the spindle. Distance piece (18) will fall as spindle is withdrawn.

Remove the wheel from the fork ends by twisting it sideways to release the brake anchorage plate, and then pull out of the fork ends.

Refit in the reverse order.

NOTE. Ensure that :

(a) the brake anchorage plate is correctly located on the anchor bolt; see Illustration 22.

(b) the speedometer driving cable engages with the driving spindle and that the cable lies straight.

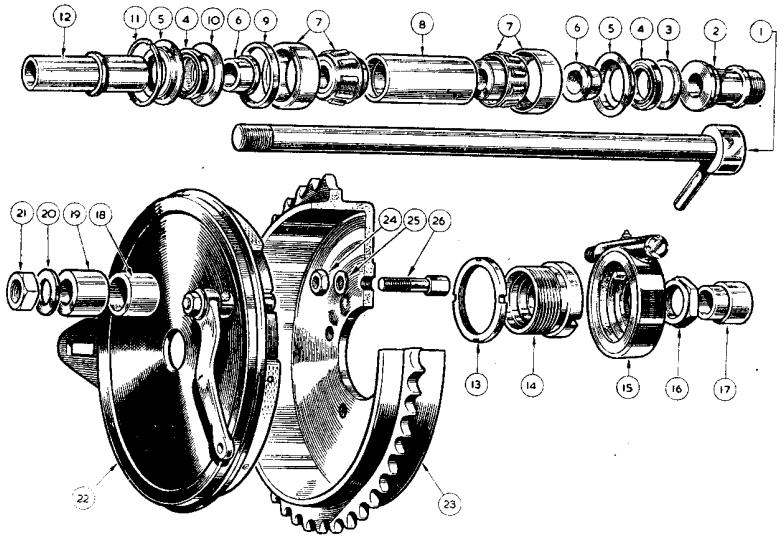

Illustration 21

Rear wheel bearings, Competition models

1 WHEEL SPINDLE.
2 SPEEDOMETER GEAR BOX SLEEVE.
3 RING RETAINING OIL SEAL (Small).
4 OIL SEAL.
5 CUP FOR OIL SEAL.
6 OIL SEAL DISTANCE PIECE.
7 TAPER ROLLER BEARING COMPLETE.
8 SPACER BETWEEN BEARINGS.
9 BEARING SPACING COLLAR (Brake Side).
10 RING RETAINING OIL SEAL (Large).
11 CIRCLIP.
12 INNER SPACER FOR BRAKE COVER PLATE.
13 LOCK NUT FOR ADJUSTING RING.
14 ADJUSTING RING.
15 SPEEDOMETER GEAR BOX COMPLETE.
16 SPEEDOMETER GEAR BOX FIXING NUT.
17 SPACER FOR FORK END.
18 SPACER FOR BRAKE COVER PLATE (Inside Forkend).
19 SPACER FOR BRAKE COVER PLATE (Outside).
20 SPINDLE END WASHER.
21 SPINDLE END NUT.
22 BRAKE COVER PLATE COMPLETE.
23 BRAKE DRUM.
24 BRAKE DRUM FIXING BOLT NUT.
25 BRAKE DRUM FIXING BOLT LOCK WASHER.
26 BRAKE DRUM FIXING BOLT.

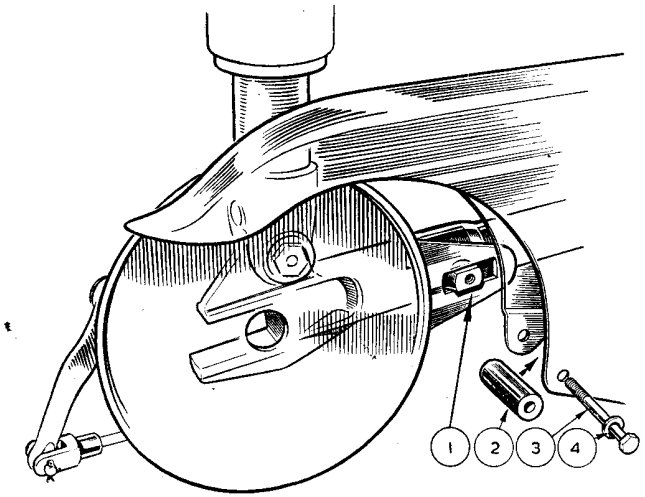

Illustration 22 **Rear Wheel Brake Anchorage**

1 BRAKE ANCHORAGE BOSS.
2 SPACER.
3 FIXING BOLT.
4 WASHER.

WHEEL BEARINGS AND ADJUSTMENT

The wheel bearings are of taper roller type. See illustrations. The outer cups for the rollers are pressed into the hub shell. They have a fixed location one side and an adjustable location on the other. The fixed location is provided by a circlip in a groove cut in one end of the hub shell, while the adjustable location is regulated by a screwed ring that is threaded into the opposite end of the hub and the position of which can be locked by an encircling nut.

On all wheels the adjusting ring is located on the right-hand side.

It is rarely necessary to make adjustment to wheel bearings. It is most important they are not adjusted too tightly as this would quickly ruin them. There must always be a slight amount of end play. This should be about .002", which represents a just perceptible rim rock. (Not more than $\frac{1}{64}$" rock.)

A service method of ensuring correct adjustment is :

Slacken the lock nut.

Tighten the adjusting ring until all slackness has been taken up.

Slacken back the adjusting ring exactly one-half turn.

Tighten the lock nut, making sure that, when doing so, the adjusting ring does not creep round and that the cover disc is positioned to permit grease gun application to the nipple.

TO DISMANTLE FRONT WHEEL BEARINGS

Remove wheel from machine.

Remove nut securing brake cover plate, withdraw cover plate with brake shoes, etc.

Then remove brake cover positioning nut and washer.

Then turn to the right-hand side of wheel, remove adjusting ring lock nut and lift off cover disc.

Then completely unscrew the adjusting ring.

Now carefully apply pressure to the threaded end of the wheel spindle which will eject from the opposite end of the hub, the washer (7), oil seal (8) and oil seal cup (9) together with the bearing outer ring (6). The wheel spindle with its two sets of rollers in cages may now be lifted out leaving *in situ* only the fixed bearing ring together with the oil seal, washer and cup for that side bearing.

If it is desired to remove these pressure is first applied to the visible washer, by which the assembly is forced inward sufficiently to permit extraction of the retaining circlip, after which through the medium of a mandrel or a piece of tubing of external diameter, a trifle smaller than the hub bore, apply pressure to the inner edge of the fixed bearing ring so that it is forced out of the hub end. As it emerges it will push out the end washer (2), the oil seal (3) and the oil seal encircling collar (4) and the inner washer (5).

To refit reverse the above procedure remembering that after bearing ring (6), washer (5), spacer (4), oil seal (3) and washer (2) have been inserted, to refit the circlip (1) snugly in its groove and to then apply pressure to the inner edge of the bearing ring to force the assembly tightly back against the retaining circlip.

Finally, position the disc when tightening the adjusting ring lock nut so that access to the grease nipple is possible.

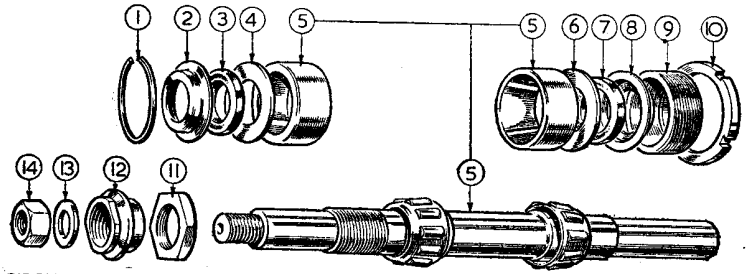

1. CIRCLIP.
2. OIL SEAL CUP.
3. OIL SEAL.
4. WASHER RETAINING SEAL.
5. WHEEL SPINDLE COMPLETE.
6. WASHER RETAINING SEAL.
7. OIL SEAL.
8. OIL SEAL CUP.
9. ADJUSTING RING.
10. ADJUSTING RING LOCKNUT.
11. NUT LOCATING BRAKE COVER PLATE.
12. NUT SECURING BRAKE COVER PLATE.
13. SPINDLE END WASHER.
14. SPINDLE END NUT.

Illustration 23 **Front wheel bearings**

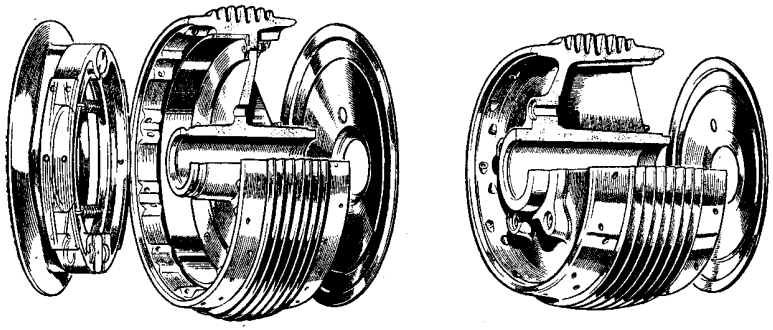

Illustration 24 **Front and rear hubs**

TO DISMANTLE REAR WHEEL BEARINGS

With wheel still *in situ* first of all slacken the nut (16), securing the speedometer drive gear box. Then remove the wheel from cycle when the above nut should be removed and the speedometer gear box withdrawn. (If wheel is of non-detachable type remove the brake cover plate and withdraw the solid centre spindle together with all spacers attached).

Next, slacken the adjuster sleeve lock nut (13) and completely unscrew the adjuster sleeve (14) which will come away together with the sleeve upon which speedometer drive is mounted and also the cover disc. Then withdraw the washer (3), the oil seal (4) and the oil seal cup (5).

Now turn to the brake side of wheel and using a short bar of $\frac{7}{8}$" external diameter apply pressure to the end of the projecting sleeve (6), which pressure will force out wheel bearing ring (7) together with the two taper roller bearings (7) and the spacing sleeve (8), leaving *in situ* only the bearing ring on the brake side together with oil seal, washers and retaining circlip.

If it is desired to remove this bearing ring pressure must be applied to the washer immediately under the circlip, until it is possible to extract the circlip. The outer seal cup (5), the oil seal (4) and the retaining washer (10) are then free to be withdrawn. The bearing ring may then be forced out of the end of the hub bore by applying pressure to its inner edge, through the medium of a bar or tube of suitable diameter, passed through the hub bore.

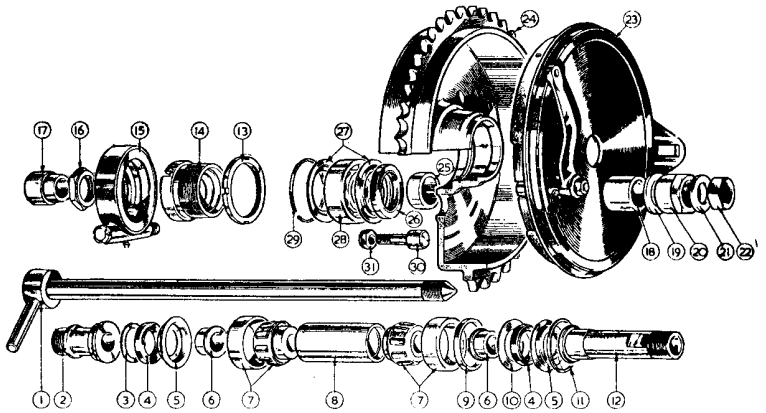

Illustration 25 **Rear wheel bearings and brake drum**

1 WITHDRAWABLE WHEEL SPINDLE
2 SPEEDOMETER GEAR BOX SLEEVE.
3 RING RETAINING OIL SEAL (Small).
4 OIL SEAL.
5 CUP FOR OIL SEAL.
6 OIL SEAL DISTANCE PIECE.
7 TAPER ROLLER BEARING COMPLETE.
8 SPACER BETWEEN BEARINGS.
9 BEARING SPACING COLLAR (Brake Side).
10 RING RETAINING OIL SEAL (Large).
11 CIRCLIP.
12 BRAKE DRUM DUMMY SPINDLE.
13 LOCK NUT FOR ADJUSTING RING.
14 ADJUSTING RING.
15 SPEEDOMETER GEAR BOX COMPLETE.
16 SPEEDOMETER GEAR BOX FIXING NUT
17 SPACER FOR WITHDRAWABLE SPINDLE.
18 OUTER SPACER FOR BRAKE COVER PLATE.
19 WASHER FOR COVER PLATE FIXING NUT
20 BRAKE COVER PLATE FIXING NUT.
21 SPINDLE END WASHER.
22 SPINDLE END NUT.
23 BRAKE COVER PLATE COMPLETE.
24 REAR BRAKE DRUM.
25 INNER SPACER FOR BRAKE COVER PLATE
26 BRAKE DRUM BEARING OIL SEAL.
27 BRAKE DRUM OIL SEAL WASHERS.
28 BRAKE DRUM BALL BEARING.
29 CIRCLIP RETAINING BEARING.
30 DRIVING PEG (5 Off).
31 NUT SECURING DRIVING PEG (5 Off).

Reassembly is carried out in exactly reverse order, care being necessary after pressing in the brake side bearing ring sufficiently far to permit fitting the circlip, to then force the ring back until seal cup (5) is tightly in contact with the retaining circlip before proceeding with further assembly.

Final adjustment of the bearings should allow the slightest possible degree of end play, and when correctly adjusted just perceptible rim rock upon refitting the wheel should be observable.

NOTE—Upon tightening the adjusting ring nut (13) the cover disc must be positioned to permit application of the gun to the grease nipple, the hole in disc being provided for that purpose.

FRONT BRAKE ADJUSTMENT

Major adjustment of the frontbrake shoes is made on the brake thrust pins, by fitting packingwashers under the pins, as already described.

Minor adjustment of the front brake shoes is made by altering the position of the brake cable adjuster on the fork assembly. Unscrew the adjuster to " take up" the front brake. The adjuster is locked in position by a nut.

Adjust front brake by :

Place machine on centre stand.

Slacken lock nut on cable adjuster.

Unscrew the cable adjuster till, by rotating the front wheel, it can be felt the brake shoes are just touching the brake drum.

Then screw back the adjuster two complete turns and tighten the lock nut.

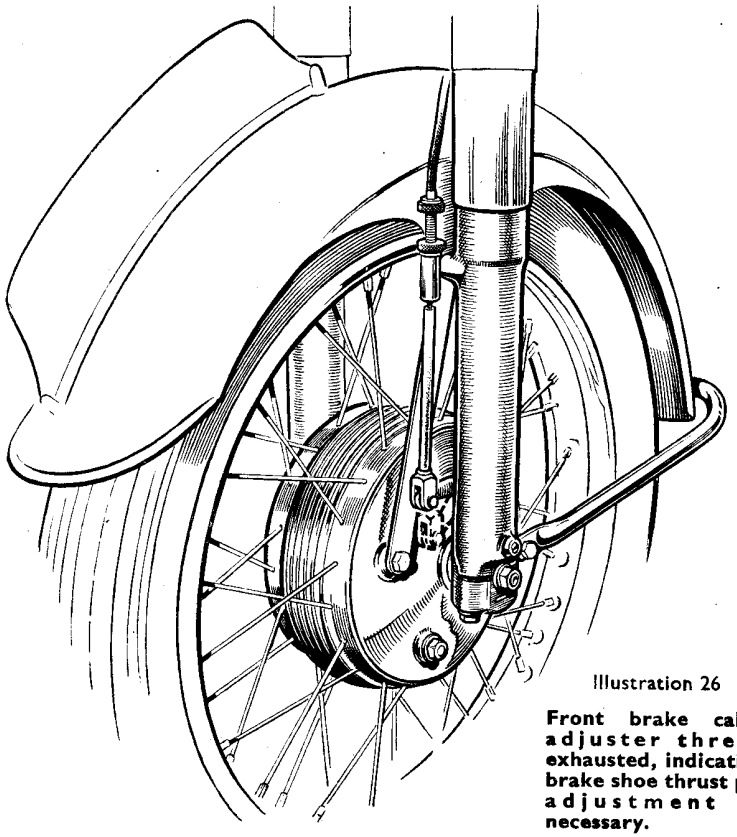

Illustration 26

Front brake cable adjuster thread exhausted, indicating brake shoe thrust pin adjustment is necessary.

REAR BRAKE ADJUSTMENT

Major adjustment of the rear brake shoes is made on the brake thrust pins, by fitting packing washers under the pins, as already described.

Minor adjustment of the rear brake shoes is made by altering the position, on the brake rod, of the knurled adjusting nut. Screw the nut further on the rod to " take up " the rear brake.

Adjust rear brake by :

Place machine on centre stand.

Screw further on the brake rod the knurled adjusting nut till, by rotating the wheel, it can be felt the brake shoes are just touching the brake drum.

Then unscrew the adjusting nut two complete turns. (The adjusting nut is automatically locked in position in virtue of the two projecting noses on it engaging in accommodating slots cut in the clip which connects the brake rod and brake pedal lever and being retained in that position by the spring which encircles the rear end of the brake rod.)

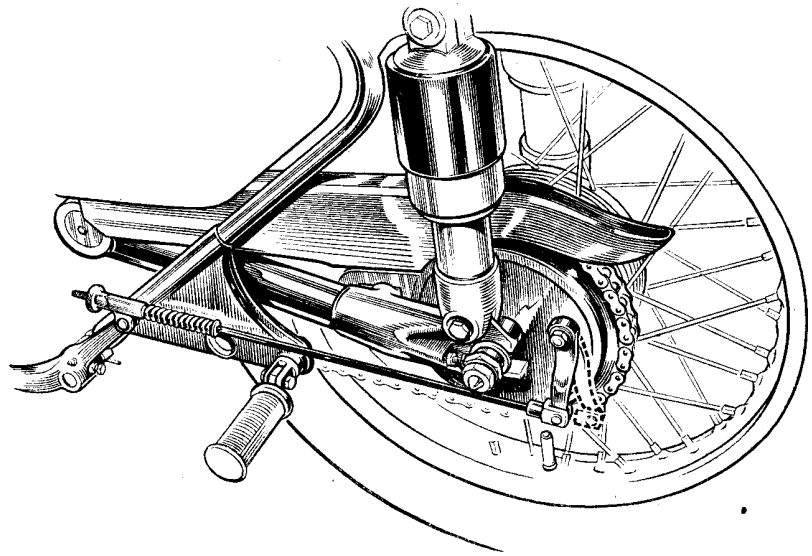

Illustration 27

Brake rod adjustment exhausted, indicating brake shoe thrust pin adjustment is essential.

FRONT BRAKE COVER PLATE

It is most important the front brake cover plate is correctly positioned.

It is retained to the front wheel spindle by an inside nut (part number 021931) and an outside nut (part number 018071).

The inside nut must be positioned so that when the cover plate is applied, the outer face of the latter lies flush with the hub shell edge.

The outside nut is fitted so that its hexagonal side is against the brake cover plate.

BRAKE SHOES

The front and rear brake shoes, springs and expanders are interchangeable. The two shoes in each brake are **NOT** identical, they are " handed."
One end of each shoe bears on a fulcrum fixed in the brake cover plate. The other end accommodates a detachable thrust pin. By inserting washers under a thrust pin its effective height can be increased, thereby compensating for wear on the brake linings.

BRAKE PEDAL ADJUSTMENT

See Illustation 28
The Pedal is located by a spring-loaded sprag which lies between the stop on the pedal and the leg of hair pin spring.
To adjust the position of the pedal: slacken the spindle nut on the right hand side of the machine; move the pedal to the desired position; hold the pedal in this position and tighten the spindle nut.
The most suitable position for normal use is, with the brake " OFF", for the pedal just to be clear of the footrest rubber.
After altering the pedal position, check the rear brake adjustment.

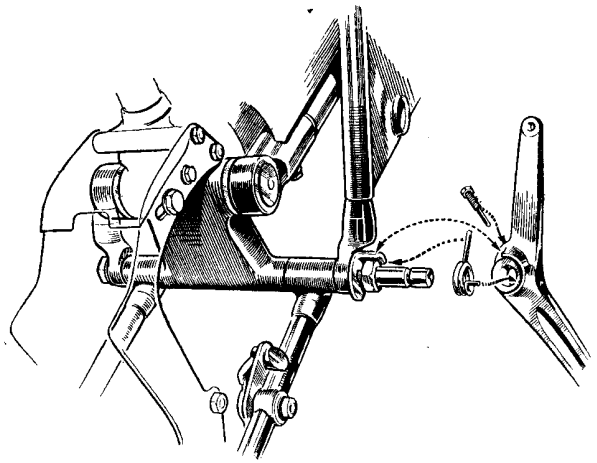

Illustration 28

BRAKE DRUMS

The front wheel brake drum is a shrunk in fit in the hub shell (assembled under heat) and secured additionally by five screws.
The rear wheel brake drum is integral with the rear chain sprocket and on the Competition models is secured to the rear hub by five bolts and nuts. Under each nut is a lock washer of the tab type and it is essential these are always in position.
Harshness in transmission can be caused by the drum retaining bolts and nuts being loose.
On quickly detachable wheels the rear brake drum is mounted on a separate ball bearing and the drive to rear wheel is by means of five studs projecting from the hub face which engage with holes in the drum back face, thereby permitting removal of the wheel with the brake drum still *in situ*.

BRAKE SHOE ADJUSTMENT

Brake adjustment, to compensate for lining wear, is normally made by means of a finger adjuster on the rear brake rod and a cable adjuster for the front brake cable.
After a very considerable mileage this continual adjustment causes the brake cam to occupy a position whereby the available leverage is considerably reduced and, as a result, the brake loses efficiency. See illustrations 26 and 27.
To overcome this a hardened headed thrust pin is fitted to each shoe to enable a packing washer to be fitted under the head as, and when, required. Eight of these washers (000174) are provided in the tool kit. When wear of the brake linings is taken up in this manner it is then necessary to unscrew considerably the adjusting nut on the rear brake rod, or screw in the cable adjuster of the front brake cable, and afterwards adjust the brake, as described afterwards.

When a brake cover plate has been disturbed, it is advisable, upon re-assembly, to centralise the shoes in the brake drum to ensure equal pressure to each. In the case of the front wheel this is best done before re-fitting the wheel to the machine, but in the case of the rear wheel it is best done after re-fitting.
If brake shoes tend to squeak, when the brake is applied it is generally an indication the brake shoes are not centralised in the drum.

Centralise brake shoes, Front or Rear, by :
Ensure the nut securing the cover plate and also the fulcrum stud nut (front only) are slightly slacked off.
Place on the brake expander lever a tubular spanner (to increase the leverage), and, while maintaining pressure on the tubular spanner (to expand fully the brake shoes), fully tighten the spindle nut binding the cover plate to the spindle and also the nut on fulcrum stud.

Illustration 29

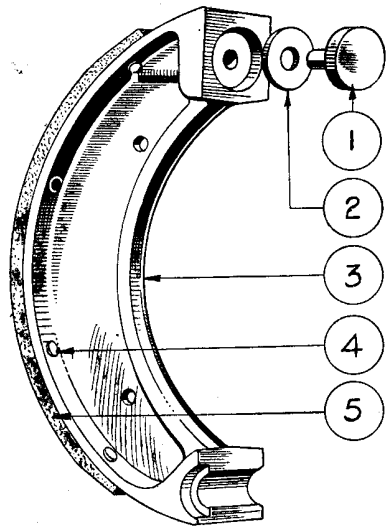

(1) **Brake shoe thrust pin.**
(2) **Thrust pin packing washer.**
(3) **Brake shoe.**
(4) **Rivet, securing brake shoe lining.**
(5) **Brake shoe lining.**

RIMS AND SPOKES

The front and rear rims are each drilled for forty spokes, but owing to differing spoke angularity are not interchangeable.

TYRES AND SERVICE

Obtaining satisfactory life and service from the tyres is largely a matter within the user's control because the first essential is correct inflation. Check tyre pressures with a low pressure gauge at least once a week. Inflate as may be necessary.
Avoid unnecessary, or " stunt," acceleration and fierce braking, which wear out tyres by causing wheel spin and skid.
Do not drive in tram lines. It is dangerous, especially when wet, and the uprising edges of worn rails will damage the tyres.
Remove flints, etc., that become embedded in the tread and, if any oil gets on the tyres or spokes, clean it off with petrol.
Make sure the front and rear wheels are in track. When the wheel alignment is correct, a piece of thin string stretched taut across both wheels, about four inches from, and parallel to, the ground, should just touch each tyre at both sides of the wheel centres. Alternatively, a straight wooden batten, about five feet long, is handy to use for checking wheel alignment. This should be applied, as in the case of string, parallel to and about four inches from the ground.
Always check the rear chain adjustment, and the rear brake adjustment, after making an alteration to the rear wheel position.
NOTE—Above remarks on wheel alignment applies only to Models with similar width tyres back and front.
On Models with larger rear tyre than front observe equal gap each side of latter when checking.

TYRE REMOVAL

It is not essential to remove a wheel from the machine to repair a puncture but it will usually be found desirable and more convenient to do so.

Take off outer cover and remove inner tube by :

Remove cap from tyre valve.
Remove nut from tyre valve.
Remove the " inside " from tyre valve. This allows inner tube to deflate. Most valve caps have a reduced and slotted top to engage with the valve " inside " in order to unscrew it.
Push edge of cover, that is diametrically opposite to the valve, **RIGHT INTO WELL OF RIM** and, using tyre lever 017007, pick up edge of cover **NEAR VALVE** so that it comes off over the edge of the rim.
Work off the remaining edge of the cover till it is clear of the rim. This is quite easy and there is no reason to use force.
Push upwards **valve stem** through its hole in the rim, and the inner tube is then free to be taken away.
Remove cover from rim by pushing it right into well of rim and, diametrically opposite, picking it up with the tyre lever and then working it off all the way round.

TYRE FITTING

Re-fit inner tube and outer cover by :

Place one edge of cover right into well of rim, with the three white dots on the cover side **adjacent to the valve hole,** and, commencing diametrically opposite, and using the hands only, work the cover over the edge of the rim.
Replace the valve " inside " and slightly inflate the inner tube. (Do not distend the tube.)
Fit the valve into its hole in the rim and replace its nut, only screwing it on the valve stem about half an inch.
Tuck in the inner tube so that it lies snugly in the cover. Ensure it is not twisted.
Smear some soapy water round the free edge of the cover. This is a great help in fitting and in ensuring the cover centralises itself on the rim and should always be employed if at all possible.
Introduce the free edge of the cover into the rim at the spot diametrically opposite to the valve. Get this edge right into the well of the rim and then, by working round the cover, equally on either side of the valve position, the cover will slip into place without excessive exertion, fitting the part nearest to the valve last of all.
Slightly inflate the inner tube and inspect for the inner tube being trapped between the outside edge of the cover and the rim at the spots where the valve is located.
Half inflate tyre, spin wheel and test for trueness because it is essential the pattern of the tread runs evenly and the cover must be manipulated till that occurs. This **centralisation of the cover is most important.**
Inflate to required pressure.
Screw fully home the nut on the valve.
Replace the valve cap.

TYRE PRESSURES

The following are correct minimum inflation pressures for specified loads per tyre :

Load per tyre,	200 lb.	Pressure	16 lb.	per square inch
do.	240 lb.	do.	18 lb.	do.
do.	280 lb.	do.	20 lb.	do.
do.	350 lb.	do.	24 lb.	do.
do.	400 lb.	do.	28 lb.	do.
do.	440 lb.	do.	32 lb.	do.

The best method of ascertaining the correct pressure is to actually weigh the loads on the front and rear tyres. This should be done on a weighbridge and is a service that can usually be provided by British Railways at a Goods Depot or by a Corporation at its Depot.
When the weights are known the table above can then be used.
As a rough guide it may be stated that, with a rider of average weight and with normal equipment, solo, the pressure should be 18 lb. for the front tyre and 22 lb. for the rear.

ELECTRICAL SERVICE

IGNITION

A Lucas magneto type SR-1 with automatic advance and retard is fitted to all Touring models.

A Lucas racing magneto is fitted to all Competition models.

On the SR-1 magneto fitted to all Touring models, the contact breaker is exposed by removing the moulded end cover secured with 3 captive screws.

To remove the contact breaker lever, slacken the nut securing the end of the contact breaker spring which is slotted to permit easy withdrawal of the moving contact lever.

If dirty, oily or burnt, contact points must be cleaned with a fine carborundum stone or very fine emery cloth and afterwards wiped with a cloth moistened with petrol.

Adjustment of contact breaker (Magneto type SR-1)

If and when adjustment is necessary slacken the two screws securing the fixed contact plate and adjust the position of the plate until the gap, when the contacts are fully opened, is set to the thickness of the gauge. The correct gap should be .010 to .012.

Special Notes (all models)

Check the contact breaker gap after the first 500 miles. Owing to the initial settling down there is a tendency for the gap to alter in the first few hundred miles of use.

Subsequent adjustment will only be required at long intervals, but it is nevertheless advisable to check every two thousand miles.

Lubrication

All magnetos are provided with ball bearings on the driving shaft. These bearings are packed with grease upon assembly and require no attention for a considerable time.

About every two years or when the engine is undergoing a general overhaul the magneto should be dismantled at a Lucas Service Depot and the bearings re-packed with high melting point grease.

SPARKING PLUG

The K.L.G. Type FE80 "Corundite" Plug is fitted to all models.

It has a thread of 14 mm. and the reach is $\frac{3}{4}$". The point gap is ·020 to ·022". Check the point gaps every time the engine is decarbonised and, if necessary, re-set the points.

See that the plug is fitted with its external seating washer.

Coat the thread with "Oil Dag" or Graphite paste. (See page 34.)

Firmly tighten the plug by using the standard box spanner and tommy bar (Part No. 017252.) All that is required is a GAS-TIGHT joint. Therefore do not over tighten, which will not make a gas-tight joint more gas-tight, but can, and possibly will, distort and damage the body of the plug.

Set the gaps to ·020 to ·022". Never try to move the central electrode. To widen or narrow the gap between the electrodes only move the earth (side electrodes). Check the gaps first with a gap gauge. If they are too wide tap the earth (side electrodes) towards the central electrode using preferably a small copper drift and light hammer. Check the gaps between each tap and stop when the gauge is a nice sliding fit between the central electrode and the three earth side electrodes.

If the gaps are too small to start with gently lever the earth electrodes away from the centre electrode using a small screw-driver and then tap them back as described above. Avoid damaging the centre electrode and do not attempt to move the electrodes apart by forcing anything between them.

For maximum efficiency, plugs should be cleaned at every 3,000 miles. To take the plug to pieces for cleaning, unscrew the gland nut by holding the smaller hexagon on the gland nut upside down in a vice and then using the box spanner to unscrew the larger hexagon on the body.

Then lift away the central electrode assembly which should be washed in petrol or paraffin. Then, using fairly coarse glass paper, remove the carbon deposit and wash again.

The central firing point should be cleaned with fine emery cloth. The inside of the body should be scraped clean with a knife and finally rinsed in petrol.

There is an internal washer, between the insulator and its seating in the body. On re-assembly lightly smear this with thin oil and then screw up the gland nut sufficiently tight to give a gas-tight joint.

Finally adjust the gap to ·020 to ·022".

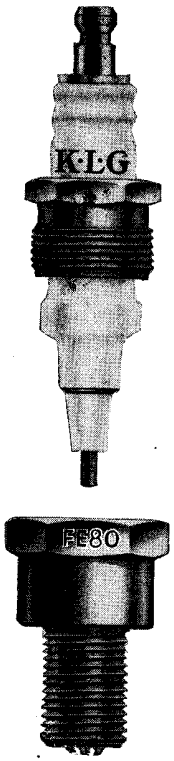

Illustration 30

DYNAMO

A LUCAS type E3–N dynamo is fitted. It is anti-clockwise in rotation. The cutting in speed is 1250–1500 r.p.m. at 7 volts and at 1,850 to 2,200 revolutions per minute it gives an output of 5 amps at 7 volts. The replacement part number is 20028A. The negative brush is insulated and the positive brush is earthed. The two exterior terminals are marked " D " and " F," indicating the respective terminals for the Positive and Field wires that lead to similarly marked terminals on the Regulator Unit.

Inspect commutator and brush gear every 5,000 to 6,000 miles. *(Maker's Recommendation.)*

Remove the cover band to inspect commutator and brush gear.

The brushes are held in contact with the commutator by means of springs. Move each brush, see they are free to slide in their holders, if dirty, or if sticking, remove and clean with a cloth moistened with petrol. Take care to replace brushes in their original positions, otherwise they will not " bed " properly on the commutator.

If, after long service, the brushes have become worn to such an extent that the brush flexible wire is exposed on the running face, or if the brushes do not make good contact with the commutator, they must be replaced by genuine LUCAS brushes.

The commutator must be free from any trace of oil or dirt and should have a highly polished appearance. Clean a dirty, or blackened, commutator by pressing a fine dry cloth against it while the engine is slowly turned over by means of the kick-starter. (It is an advantage to remove the sparking plug before doing this). If the commutator is very dirty, moisten the cloth with petrol.

At every 10,000 miles, the complete dynamo should be handed to a **Lucas Service Station** for dismantling, replacement of worn parts, cleaning and lubrication.

Electrical breakdown of the dynamo is most unusual and therefore before assuming this unit is defective, it should be tested as follows :

Check that the dynamo, regulator and battery are correctly connected.

To remove the dynamo (see page 72)

Test Dynamo in position by :

(a) Remove the two wires from the dynamo terminals and connect the two terminals with a short length of wire.

(b) Start the engine and set to run at normal idling speed.

(c) Connect the negative lead of a moving coil voltmeter (calibrated not less than 0 to 10 volts) to either of the two dynamo terminals and connect the positive lead to a good earth point on the dynamo or engine.

(d) Gradually increase the engine speed, when the voltmeter reading should rapidly rise and without fluctuation.

Do not allow the voltmeter reading to rise above 10 volts.

Do not race the engine in an attempt to increase the voltage. It is sufficient to run up the engine to a speed of 1,000 r.p.m.

If the above reading is obtained the dynamo is in order.

If there is no reading, check the brush gear.

If there is a low reading of approximately $\frac{1}{2}$ volt, the field winding may be at fault.

If there is a low reading of approximately $1\frac{1}{2}$ to 2 volts, the armature winding may be at fault.

If the tests, mentioned above, clearly indicate the dynamo is not charging, it is then desirable to remove the dynamo from the machine in order to make further tests and repairs or replacements.

TO REMOVE THE DYNAMO

Remove the left side foot rest arm.

Place a tray under primary chaincase to catch the oil.

Remove chaincase band binding screw and remove metal band and also endless rubber band.

Remove nut and washer in centre of chaincase when outer half can be taken away.

Remove spring circlip, locking plate and nut securing dynamo sprocket and withdraw sprocket with a suitable tool. (Use spanner 017254 to hold sprocket while nut is being slackened, this relieves the dynamo shaft of all bending strain).

Detach dynamo cables and loosen dynamo clamping bolt to fullest extent.

Twist dynamo by hand until the locating strip on its body is in line with the keyway cutaway in the rear engine plate housing the dynamo, in which position same can be withdrawn tilting upwards to clear gear box while doing so (see illustration 31.)

To re-fit the dynamo, reverse the foregoing taking care to accurately locate the dynamo sprocket key when applying the sprocket. See separate instructions for correct dynamo chain adjustment and re-fitting outer half of chaincase. Ensure that dynamo sprocket securing nut is well tightened before refitting locking plate and retaining circlip.

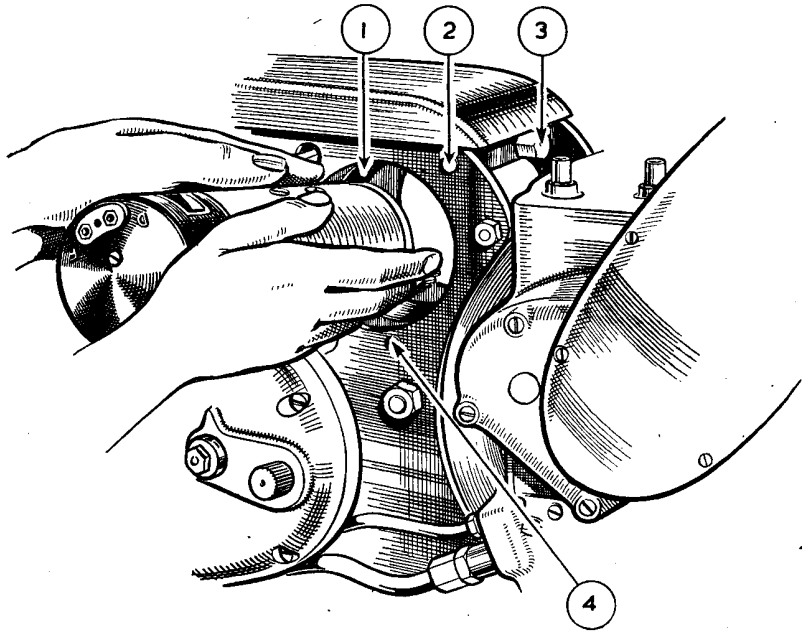

Illustration 31

1. STRAP (metal) CLAMPING DYNAMO IN POSITION.
2. SQUARE CROSSBAR, TO ACCOMMODATE THE BOLT WHICH TIGHTENS DYNAMO CLAMPING STRAP.
3. BOLT, FOR TIGHTENING DYNAMO CLAMPING STRAP.
4. HINGE PIN FOR ANCHORING LOWER END OF DYNAMO CLAMPING STRAP

A.V.C. UNIT

Although the voltage regulator and the cut-out are combined structurally, they are electrically separate.

The regulator is set to maintain a pre-determined generator voltage at all speeds and regulates the output of the dynamo to the battery according to the state of charge of the battery. The charge rate is at its maximum when the battery is discharged, automatically tapering off to a minimum as the battery becomes charged and its voltage rises.

Normally, during day-time running, when the battery is in good condition, the dynamo gives only a trickle charge, so that the ammeter reading will seldom exceed 1 to 2 amperes, *i.e.* half to one division on scale. The cut-out is an automatic switch which is connected between the dynamo and the battery. When the engine is running fast enough to cause the voltage of the dynamo to exceed that of the battery the cut-out allows the battery to be charged by the dynamo. On the other hand, when the engine speed is low, or the engine is stationary, the cut-out disconnects the battery from the dynamo, thereby preventing current flowing back from the battery to the dynamo, a proceeding that would soon cause the battery to become completely discharged.

The regulator and cut-out are accurately set during manufacture. If, under normal running conditions, it is found that the battery is continually in a low state of charge, or is being constantly over-charged, then the regulator setting should be checked by a qualified electrician and, if necessary, re-set. Whenever possible, this should be carried out by a Lucas Service Depot or Agent.

TO REMOVE A.V.C. UNIT

The four terminals of the A.V.C. Unit are plainly marked by the letters F.A.D.E. Wires from F and D go to similarly marked terminals on the dynamo. The A terminal is connected to one of the ammeter terminals and the E terminal is " earthed."

We specially warn against unskilled meddling with the settings of the regulator and the cut-out contacts.

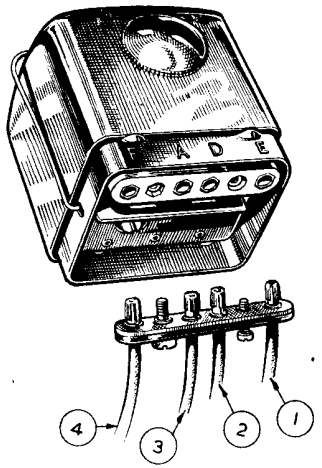

Illustration 32

(1) To Earth.
(2) To Terminal D on Dynamo.
(3) To Terminal 3 on Switch.
(4) To Terminal F on Dynamo.

Connections to A.V.C. unit.

The A.V.C. unit is held in sponge rubber and housed in a partition at the rear top corner of the tool box. To remove it, open the box lid, grasp the unit between the fingers and thumb of one hand, and gently and firmly pull it out of the rubber envelope.

Battery

The battery fitted is LUCAS. This is a lead-acid battery in which the electrolyte is in free liquid form. The voltage is 6 and the capacity is 12 ampere hours.

BATTERY REMOVAL

The battery is housed in the front portion of the tool box and retained in position on its platform by a stout rubber strap.

To remove the battery, release the strap by grasping the metal loop attached to its lower end, pull downwards until the strap and loop are freed from the retaining clip at the base of the platform, and allow the strap to go slack. The battery can now be lifted out. Once every fourteen days, remove the battery, lift off the cover and brush away any dirt that may have accumulated. Remove the three Vent plugs and check the electrolyte level and the specific gravity.

NOTE—**NEVER** bring a naked light near a battery when the vent plugs have been removed, or when the battery is being charged, as the gas given off by the electrolyte is highly explosive.

The specific gravity of the electrolyte indicates the state of charge of the battery. With a fully charged battery the specific gravity of the electrolyte should be 1·280 to 1·300. Check the gravity by means of a hydrometer, and if it is below 1·150 the battery should be charged as soon as possible by the normal running of the motor cycle. If this cannot be arranged, the battery should be charged from an external source.

If the level of the electrolyte is so low that a hydrometer reading cannot be taken, no attempt should be made to take a reading after adding distilled water until the battery has been on charge for at least 30 minutes.

NEVER transfer the electrolyte from one cell to another.

NEVER leave a battery in a discharged condition. It must be put on charge as soon as possible.

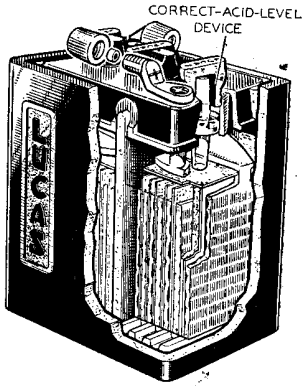

Illustration 33

Lucas Battery

Check if the electrolyte in each cell is level with the top of the separators. Top-up, if necessary, with distilled water. Do not allow the distilled water to come into contact with metals—always only use a glass or earthenware container and funnel. See filling instructions on underside of battery lid. Beware excessive filling.

If a battery is found to need an excessive amount of topping-up, steps should be taken to find out the reason. For example, the battery may be receiving an excessive charge, in which case the regulator setting may need adjustment. If one cell in particular needs topping-up more than another, it is likely the case, or container, is cracked, in which event the battery must be replaced and arrangements made to clean up the battery carrier.

Metal parts should be well cleaned and, if possible, washed, with a solution of ammonia, or bicarbonate of soda, in water.

Vent plugs should be kept clean and air passages in them kept free. Re-fix vent plugs tightly.

Keep the battery, and surrounding parts, particularly the tops of the cells, clean and dry. Brush away any sand, dust or road slush.

Battery electrolyte, which contains sulphuric acid in a diluted form, is destructive to practically everything except rubber, lead, glass or earthenware. Therefore, rags used to clean battery tops, etc., should be thrown away afterwards. If put back in the tool box they will cause the tools to rust.

Assuming the temperature of the electrolyte is about 60° F. a test with a hydrometer quickly shows the state of charge, as under :

Reading 1.280 to 1.300 indicates fully charged.
Reading about 1.210 indicates half discharged.
Reading below 1.150 indicates fully discharged.

If the electrolyte exeeds this, ·002 must be added to the hydrometer reading for each 5° F. rise to give the specific gravity at 60° F. Similarly, ·002 mus be ubtracted from the hydrometer reading for every 5° F. below 60° F.

LIGHTING AND ACCESSORIES

Headlamp

A LUCAS headlamp is fitted and snugly mounted on each side is a neat torpedo shaped pilot lamp. These pilot lamps and also the headlamp are secured to the front fork arms by means of tubular bolts through which a wire passes to each pilot lamp. The headlamp bulb has two filaments one of which provides the main driving beam and the other a dipped beam brought into operation as required by the dipping switch on the left handlebar. The headlamp reflector and glass are made up as one assembly and are in consequence not sold separately as spares. The main bulb is of the pre-focus type and the design of its holder is such that the bulb is correctly positioned in the reflector. No focussing is therefore necessary when a replacement bulb is fitted.

To remove headlamp rim and light unit

Slacken the screw on the top of the lamp body at the front, pull the rim outward from the top and, as the front comes away, lower slightly to disengage the bottom tag from the lamp shell. Twist the back cap in an anti-clockwise direction and pull it off, the bulb can then be removed. The light unit is secured to the rim by means of spring clips.

These can be disengaged from the turned up inner edge of the rim by pressing with a screwdriver blade and, at the same time, working away from the edge.

To replace the headlamp rim and light unit

Lay the light unit in the rim so that the location block on the unit back engages with the forked bracket on the rim.

Replace, by springing in, the spring clips so that they are evenly spaced around the rim.

To replace the back cap engage the projections on the inside of the back cap with the slots in the holder, press on and secure by twisting it to the right.

Engage bottom tag on lamp rim with the small slit in the shell and gently force the top of the rim back into the shell, after which re-tighten the locking screw on the top of the lamp body.

Access to the pilot lamps interior for bulb removal is obtained by removing the screw at the rear end and gently pulling forward on the glass rim.

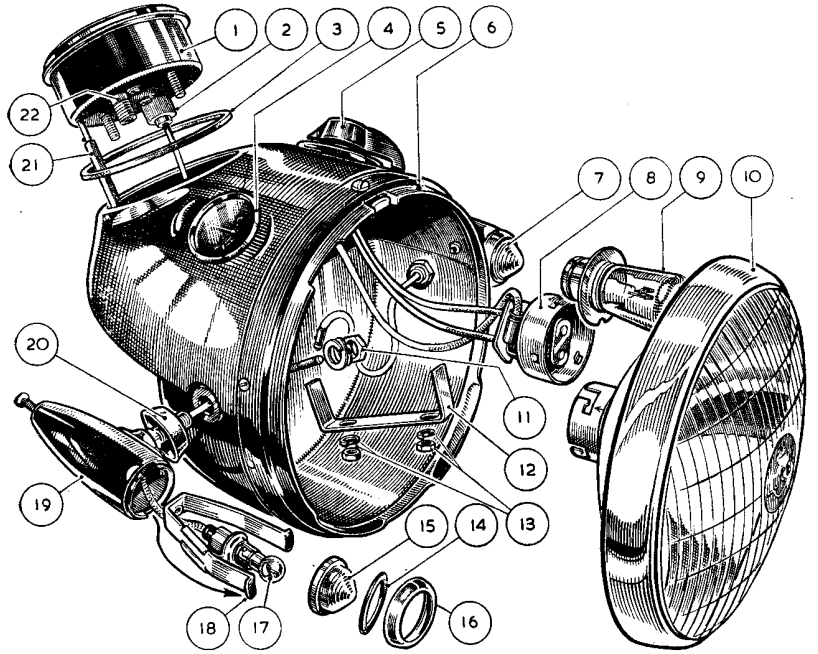

Illustration 34

1 SPEEDOMETER.
2 SPEEDOMETER, LAMP.
3 SPEEDOMETER, SEALING RING.
4 AMMETER.
5 LAMPS, CONTROL SWITCH.
6 HEADLAMP SHELL.
7 PILOT LAMP.
8 LAMP CONNECTOR.
9 HEADLAMP BULB.
10 GLASS, REFLECTOR AND BULB HOLDER, SEALED UNIT.
11 NUT AND WASHER, FIXING PILOT LAMP.
12 SPEEDOMETER SECURING BRACKET.
13 NUT AND WASHER FOR 12.
14 PILOT LAMP SEALING RING.
15 PILOT LAMP GLASS.
16 PILOT LAMP RIM.
17 PILOT LAMP BULB.
18 PILOT LAMP SECURING CLIP.
19 PILOT LAMP SHELL.
20 PILOT LAMP RUBBER SEAL.
21 SPEEDOMETER TRIP RESET KNOB.
22 DRIVING CABLE CONNECTOR UNION.

Rear lamp

A LUCAS rear lamp is fitted. The body, with bulb holder, is secured to the rear number plate.

Details of lamp bulbs are given in "**DATA.**"

Horn

The horn push switch, situated on the left handlebar.

Fuses

There are no detachable fuses in LUCAS motor cycle electrical equipment.

Snap wire connector

The LUCAS snap connector, as shown in Illustration 33, is made up of four components. Two are tubular sleeves, having pointed extremities, and which are soldered to the ends of the two wires to be connected. The third part is the centre split ferrule, into which the two sleeves snap and the fourth component is a rubber sleeve which covers the whole connector. That rubber sleeve serves the dual purpose of insulating the various metal parts and also preventing same from separation as the result of vibration.

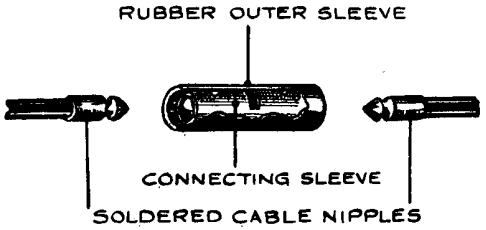

Illustration 35

Lucas snap connector
Part number 900269

One snap connector is used in the rear lamp wire and another is used in the wire connecting the regulator unit to the output side of the ammeter in the head lamp.

Two more are used in the headlamp interior (pilot lamp wires).

Terminals

All models have the POSITIVE battery terminal connected to "EARTH".

The earth wires (two—one from regulator, the other from terminal of battery) and the high-tension wire (on sparking plug end of wire from magneto to sparking plug) have terminals of the solid sleeve type having an eye at the extreme end. To make such a connection, it is necessary to bare the end of the wire for $\frac{3}{8}$", pass the terminal over the wire so that the bared end fully enters the reduced core of the terminal and then flatten that part by either pinching in a vice or by hammering.

The two earth wires, mentioned above, are connected to the "earth" by securing them to the seat lug (which is situated just under the saddle) by means of a nut, washer and a screw. It is essential that the connections are kept clean and the screw must be kept fully tight.

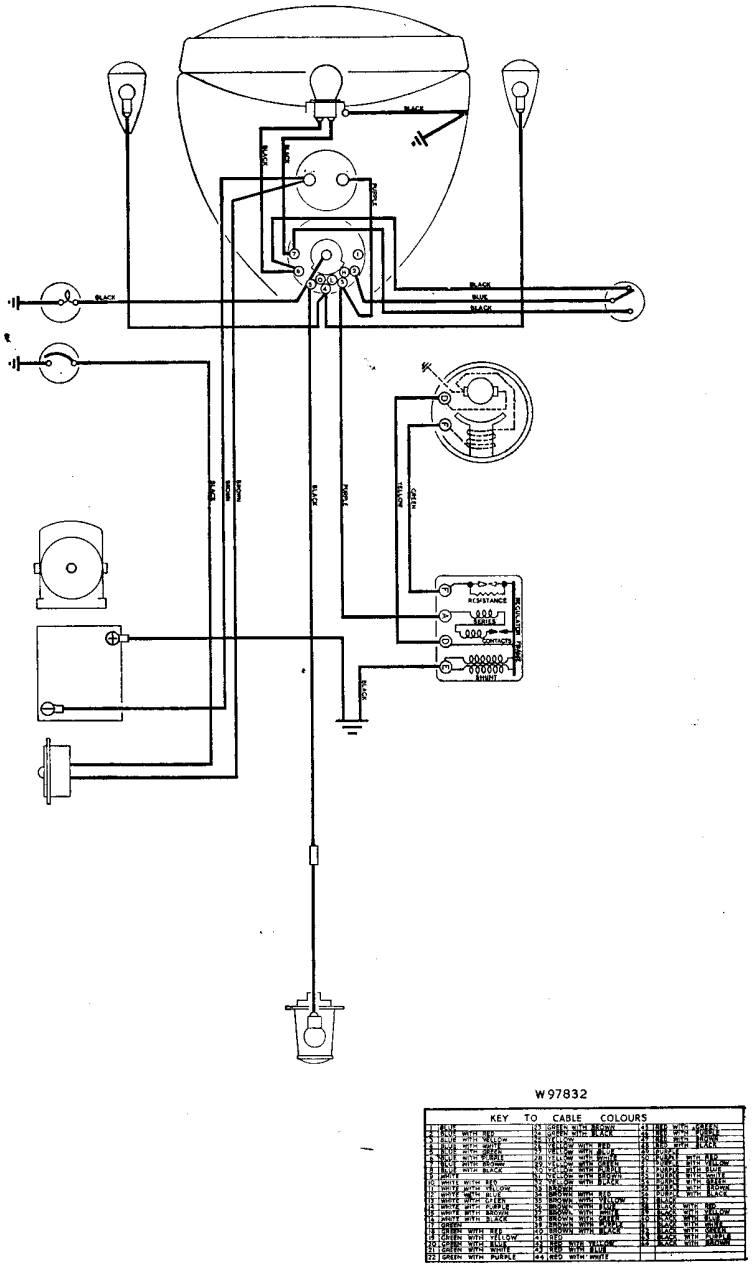

Illustration 35

Wiring diagram

USEFUL INFORMATION

In the following five paragraphs are particulars of failures and troubles that can occur, together with the probable reasons. These troubles are arranged in the order of their probability.

TRACING TROUBLES

Engine fails to start, or is difficult to start, may be due to :

Water on high-tension pick-up.
Moisture on sparking plug.
Oiled up, or fouled, sparking plug.
Throttle opening too large.
Pilot jet choked.
Air lever in open position, or bad air leak at carburetter flange.
Lack of fuel because of insufficient flooding (cold only).
Lack of fuel because of pipe, or tap, obstruction.
Excessive flooding of carburetter (with hot engine only).
Stuck up engine valve.
Weak, or broken, valve spring.
Valve not seating properly.
Contact points dirty.
Incorrect contact point gap.

Engine misses fire may be due to :

Defective, or oiled, sparking plug.
Incorrect contact point gap.
Contact breaker points loose.
Rocker adjustment incorrect.
Oil on contact breaker points.
Defective sparking plug wire.
Partially obstructed petrol supply.
Faulty automatic ignition control unit.

Loss of power may be due to :

Faulty sparking plug.
Lack of oil in tank.
Weak, or broken, valve spring.
Sticky valve stem.
Valve not seating properly.
Brakes adjusted too closely.
Badly fitting, or broken, piston rings.
Punctured carburetter float.
Engine carbonised.
Choked silencer
Faulty automatic ignition control unit.

Engine overheats may be due to :

Lack of proper lubrication. (Quality or quantity of oil.)
Faulty sparking plug.
Air control to carburetter out of order.
Punctured carburetter float.
Engine carbonised.
Weak valve springs.
Pitted valve seats.
Worn piston rings.
Ignition setting incorrect.
Choked silencer.

Engine stops suddenly may be due to :

No petrol in tank, or choked petrol supply.
High-tension wire detached from sparking plug.
Choked main jet.
Oiled up, or fouled, sparking plug.
Water on high-tension pick-up, or sparking plug.
Water in float chamber.
Vent hole in petrol tank filler cap choked.
Stuck up valve.

EXCESSIVE OIL CONSUMPTION

Excessive oil consumption may be due to :
Stoppage, or partial stoppage, in the pipe returning oil from the engine to the oil tank.
Badly worn, or stuck up, piston rings. (Causing high pressure in the crankcase.)
Air leak in dry sump oiling system.
Worn inlet valve stem or guide.
Improper non-return valve action.

EXCESSIVE PETROL CONSUMPTION

Excessive petrol consumption may be due to :
Leaks in the petrol feed system. (Damaged fibre washers, loose union nuts on piping, defective float needle action.)
Incorrect ignition setting. (Ignition not advanced sufficiently.)
Defective engine valve action.
Incorrect use of air control lever.
Moving parts of carburetter badly worn. (Only possible after very considerable mileage.)
Bad air leak at carburetter junction.

STEERING UNSATISFACTORY

Incorrect steering head adjustment. (too tight or excessively slack.)
Pitted steering head ball races resulting from loose adjustment.
Wheels out of alignment.
Front and/or rear tyre tread not correctly manipulated to run true with wheel (causes handlebar oscillation at low road speed.)
Damaged front fork main tubes resulting from impact.

ABNORMAL TYRE WEAR

Abnormal tyre wear may be due to :

Incorrect tyre pressure.

Wheels not in alignment.

Harsh driving methods. (Misuse of acceleration and braking.)

CLEANING THE MACHINE

Do not attempt to rub, or brush, mud off the enamelled surfaces because this will soon destroy the sheen of the enamel. Mud, and other road dirt, should be soaked off with water.

The best method is to use a small hose, taking care not to direct water on to the engine, carburetter, magneto and other such parts. As a poorer substitute, a pail of water and a sponge may be used.

After washing down with water, the surplus moisture should be removed with a chamois leather, and, when the enamelled surfaces are thoroughly dry, they may be polished with a good wax polish and soft dusters.

Such parts as the engine crankcase and the gear box can be cleaned by applying paraffin with a stiff brush, and, with a final application of petrol, will come up like new.

CHROMIUM PLATING

Under some climatic conditions, a rusty looking deposit may be observed on ferrous parts that are chromium plated. This is not ordinary rust (ferric oxide) but is a salt deposit that, in most cases and in its early stages, can be quickly and easily removed with a damp chamois leather. In stubborn cases it may be necessary to use a special chromium cleaning compound.

Lack of attention will lead to more serious damage.

The safest precaution during Winter is to wipe over all chromium plated parts with a soft rag soaked in **" TEKALL,"** which is a lanoline base rust preventative marketed in small tins and available at most garages. This material, so applied, leaves an almost invisible film that is impervious to moisture and its use cannot be too highly recommended to owners who value the appearance of their mounts.

In Summer, when those conditions do not prevail, chromium parts should be frequently cleaned with a damp chamois leather and afterwards polished with a soft duster, or, better still, with a polishing cloth of the **" Selvyt "** type.

If a polish is used it must be one of the special compounds for chromium plating only. Ordinary metal polishing liquids, in particular, must not, on any account, be used because these, almost without exception, contain acids, which attack chromium.

NOTE—**" Tekall "** is a product of **20th Century Finishes Ltd., 175-177, Kirkgate, Wakefield,** and is retailed in ½ pint and 1 pint tins. It can be obtained from our Spare Parts Department, as follows :

½ pint tin **" Tekall," Part number 011957.**

1 pint tin **" Tekall," Part number 011958.**

REPAIRS AND SERVICE

REPAIRS

The instructions regarding repairs should be clear and definite, otherwise the cost may be greater than that expected. We shall be pleased to give estimates for repairs if parts are sent to us for that purpose. If the estimate is accepted, no charge is made for the preliminary examination, but, should it be decided not to have the work carried out, it **MAY** be necessary to make a charge to cover the cost of whatever dismantling and re-assembly may have been done to prepare the estimate.

Customers desiring that old parts which are replaced with new during the course of overhaul or repair be retained must make the fact known prior to the work being put in hand because, normally, such parts, having no further useful life, are scrapped upon removal.

Parts sent to us as patterns, or for repair, should have attached to them a label bearing the sender's full name and address. The instructions regarding such parts should be sent under separate cover.

If it is necessary to bring a machine, or parts, to the Works for an urgent repair, **IT IS ESSENTIAL** you **MAKE AN APPOINTMENT** beforehand to **AVOID DISAPPOINTMENT.** This can be done by letter or telephone.

CORRESPONDENCE AND ORDERS

Our routine is organised into different departments, therefore delay cannot be avoided if matters relating to more than one department are contained in one letter.

Consequently, it is desirable, when communicating with more than one department, to do so on **SEPARATE SHEETS,** each of which should bear your name and address. When writing on a technical matter, or when ordering spares, it is essential to quote the **COMPLETE ENGINE NUMBER.** Some numbers have one, or more, letters incorporated in them and these letters **MUST BE QUOTED,** otherwise model identification is not possible.

Orders should always be sent in list form and not as part of a letter.

Owners are strongly advised to purchase a Spare Parts List so that correct part numbers can be quoted. Most parts are clearly illustrated in this list which makes it very easy to recognize the part or parts required.

PROPRIETARY FITTINGS

No expense is spared to secure and fit the most suitable, and highest quality, instruments and accessories for the standard equipment of our machines.

Nevertheless, our Guarantee does not cover such parts and, in the event of trouble being experienced, the parts in question should be returned to, and claims made, direct on the actual manufacturers who will deal with them on the terms of their respective guarantees.

Those manufacturers are :

Carburetters	Messrs. Amalgamated Carburetters Ltd., Holford Road, Witton, Birmingham, 6
Chains	The Renold and Coventry Chain Co. Ltd., Didsbury, Manchester
Electrical Equipment	Messrs Joseph Lucas Ltd., Great King Street, Birmingham, 19
Gear Boxes	Messrs. Burman & Sons Ltd., Wychall Lane, King's Norton, Birmingham, 30
Sparking Plugs	K.L.G. Sparking Plugs Ltd., Putney Vale, London, S.W.15
Speedometers	Messrs. S Smith & Sons (M.A.) Ltd., Cricklewood, London
Tyres	Messrs. Dunlop Rubber Co Ltd., Fort Dunlop, Birmingham
Air Filter	Messrs. Vokes Ltd., Henley Park, Nr. Guildford, Surrey

All the above manufacturers except S. Smith & Sons (M.A.) Ltd., issue instructive literature regarding their products which is obtainable by writing to them.

SERVICE

The Service and Repair Department is situated in **Burrage Grove, Plumstead, London, S.E.18,** and is open on Mondays to Fridays from 8.30 a.m. to 12.55 p.m.—2.0 p.m. to 5.30 p.m. It is closed on Saturdays, Sundays and National Holidays.

It exists for the purposes of :

(a) Giving technical assistance verbally or through the post.

(b) Supplying spare parts over the counter or through the post.

(c) Repairing and re-conditioning machines, or parts of machines, of our make.

Burrage Grove is the first turning on the left from Burrage Road when entering Burrage Road from the Plumstead Road. (See final paragraph below.)

The nearest Railway Station is WOOLWICH ARSENAL, SOUTHERN REGION RAILWAY. This Station is five minutes walk from our Service Depot in Burrage Grove. There is an excellent service of electric trains from Charing Cross, Waterloo, Cannon Street and London Bridge Stations, Southern Region Railway.

Bus routes 53, 54, 99 122 and 122a. Trolleybus routes, 696 and 698 pass the end of Burrage Road (one minute from the Service Depot).

Bus routes 21a, 75 and 161 serve **Beresford Square** which is three minutes walk from the **Service and Repair Department.**

Visitors from the North can pass into Woolwich *via* the Free Ferry between North Woolwich and Woolwich. North Woolwich is a British Railways terminus and is also served by Bus and Trolleybus routes 101, 569, 669 and 685. There is also a tunnel under the River Thames at this point for foot passengers. The Free Ferry accommodates all types of motor vehicles and there is a very frequent service. The Southern landing stage is less than a mile from the Service Depot.

Visitors arriving by road, if they are strangers to the locality, should enquire for **Beresford Square, Woolwich.** Upon arrival there, the road skirting the Royal Arsenal should be followed in an Easterly direction for about four hundred yards, and Burrage Road is the second turning on the right after leaving the Square. Burrage Grove is then the first turning on the left.

THE DRIVER AND THE LAW

The driver of a motor cycle **MUST** be **INSURED** against Third Party Claims and **MUST** be able to produce an **INSURANCE CERTIFICATE** showing that such an insurance is in force.

If your Insurance Certificate specifies you can only drive one particular machine you **MUST NOT DRIVE** any other machine unless its owner has a current Certificate covering " **ANY DRIVER** " and it is advisable to remember that, in the absence of such a provision the penalties for doing so are very heavy.

The driver of a motor cycle **MUST** hold a current **DRIVING LICENCE.** If you are a learner and hold a Provisional Driving Licence, your machine must show, front and back, the standard " L " plates in red and white and you must not take a **PILLION PASSENGER** unless that passenger is the holder of a current **UNRESTRICTED** driving licence.

As soon as you receive your driving licence, sign it in the appropriate place and do so each time it is renewed. It is an offence not to.

Make sure you are well acquainted with the recommendations set down in the " Highway Code," a copy of which can be obtained from any main Post Office.

THE MACHINE AND THE LAW

Every motor cycle used on the public roads must be registered and carry the registration numbers and licence disc allotted to it. The dealer, from whom the machine is bought, will, generally, attend to all matters legally essential before it is used on the public roads.

To register a new machine

Send to the Local Registration Authority the following :

(a) Form " RFI/2," duly completed.

(b) The certificate of insurance.

(c) The invoice you received from your dealer when you purchased the machine.

(d) The appropriate registration fee.

In due course you will receive :

(1) A Registration Book. (Commonly called the " log " book.)

(2) A Licence Disc.

(3) Your Insurance Certificate.

(4) Your Invoice.

The Registration Book and the Licence Disc will bear the registration numbers that have been allotted to your machine and will also show the date the Road Licence expires.

Your number plates must then be painted, in white upon a black background, with the registration numbers in characters of even thickness as follows :

The numbers on the front plate must be $1\frac{3}{4}$" high, $1\frac{1}{4}$" wide and $\frac{5}{16}$" thick with spaces of $\frac{1}{2}$" between each two characters.

The numbers on the rear plate must be $2\frac{1}{2}$" high, $1\frac{3}{4}$" wide and $\frac{3}{8}$" thick with spaces $\frac{1}{2}$" between each two characters.

The Licence Disc must be enclosed in a water-tight container, having a transparent front, and this must be fixed to the machine in a conspicuous position, near the front and on the left-hand side.

It is not legally necessary to carry your Driving Licence, Insurance Certificate and Registration Book while driving your machine.

Ignition Suppressors

As required by law all 1956 Home models are issued with an approved type of radio interference suppressor already installed.

Speedometer

A speedometer MUST be fitted and it MUST BE so ILLUMINATED that it is possible to read the dial after lighting up time.

Lamps

During the official " **LIGHTING UP** " hours the machine must exhibit a white light facing forwards and a red light facing rearwards. The rear number plate must be adequately illuminated by a white light.

Each front electric light bulb **MUST** be marked with its "Wattage." (Beware of cheap, imported, bulbs that do not have this marking.)

All motor cycles made by us have electric equipment that complies with the law regarding position, size of bulbs, marking on bulbs and the correct illumination of the rear number plate.

FREE SERVICE SCHEME

FREE SERVICE SCHEME

All owners of **NEW MODELS** are entitled to one **FREE SERVICE AND INSPECTION** at 500 miles, or, at latest, three months after taking delivery.

This service is arranged by the supplying dealer to whom the **Free Service Voucher** must be handed. This voucher, together with the Instruction Manual, are supplied by us upon receipt of the signed application card to be found in the tool box upon taking delivery of a new motor cycle.

The **INSPECTION AND SERVICE** consists of :

(a) Check, and, if necessary, adjust :

(1) Rocker clearances.
(2) Contact breaker points.
(3) Sparking plug.
(4) Clutch.
(5) Chains.
(6) Wheel bearings.
(7) Brakes.
(8) Forks, legs, and steering head.
(9) Alignment of wheels.
(10) Tyre pressures.

(b) Tighten all external nuts and bolts, including cylinder bolts and fork crown pinch screws.

(c) Top-up battery and check all lighting equipment.

(d) Clean out carburetter and check for correct idling.

(e) Adjust and lubricate all cables.

(f) Grease all nipples.

(g) Drain oil system. Clean filter and replenish.

(h) Check oil level in front chaincase.

(i) Top-up gear box.

(j) Test machine on the road.

NOTE—Oils, greases and materials used are chargeable to the customer.

FOR THE CONVENIENCE OF OWNERS,

SPARES STOCKISTS

ARE APPOINTED FOR MOST DISTRICTS. TO SAVE DELAY, AND THE DELIVERY SURCHARGE, CUSTOMERS ARE RECOMMENDED TO ALWAYS APPLY TO THEIR NEAREST SPARES STOCKIST.

SPARE PARTS

GENUINE SPARE PARTS purchased from an Authorised Dealer, or from the Factory, are identical with the parts originally built into your motorcycle. By using them you are assured that they will fit accurately and give satisfactory service.

SPARES STOCKISTS

For the convenience of owners Spares Stockists are appointed for most districts. To prevent delay and save the delivery surcharge, customers are recommended always to apply to their nearest Spares Stockist.

CORRESPONDENCE AND SPARES ORDERS

Always quote the complete engine number, including all the letters in it. This will enable us to identify the machine.

Each series of frames is numbered from zero upwards, therefore, the quotation of a frame number only does not facilitate identification.

SPARES LIST

An illustrated spares list covering the models described in this Instruction Book is available on application. Price 2s. 6d. each.

PART NUMBERS

If there is any doubt about the names of parts required, or their part numbers, please send the old parts as patterns.

REMINDER

Do not forget to include your name and full postal address. We do receive orders without this very necessary information.

PAYMENT

(1) Cash with order.*
(2) Cash against pro-forma invoice.
(3) Approved ledger account.

We do not send C.O.D. (Cash on delivery).

*Add 5% of total value for carriage and packing. Minium 6d.

GUARANTEE

Full details of the guarantee relating to the models described in this book are given on page 84.

INSTRUCTION BOOKS

A copy of this book is issued free of charge to all purchasers of a new machine. Additional copies may be obtained, price 2s. 6d. each.

TOOLS AND SPECIAL EQUIPMENT

TOOLS

The standard tool kit, issued with each new machine, contains :

1	017253	Tool bag.
1	017114	Tyre inflator.
2	017007	Tyre lever.
1	017248	Pliers.
1	011188	Gudgeon pin circlip pliers.
1	017256	Screwdriver.
1	017246	Grease gun.
1	017249	Adjustable wrench.
1	017252	Sparking plug box spanner and tommy bar.
1	017254	Dynamo spanner and clutch spring nut key.
1	018178	Double end spanner, 1·010 in. by 1·200 in.
2	017052	Double end spanner. Small.
1	017053	Double end spanner. Large.
1	021889	Contact point screwdriver and gauge (Touring).
1	015023	Contact point spanner and gauge. (Competition)
1	017257	Double end spanner.
1	018055	Handlebar clip screw key.
1	018667	Key for fork crown clamp screw.
8	000174	Brake shoe thrust washer.
1	015213	$\frac{5}{16}$" Tube spanner.

OPTIONAL EQUIPMENT

The following items of optional equipment are available. They are described and priced in the Spares List.

Stop rear light.

Air cleaner.

Pillion footrests, bolted on, to fold up when not in use and specially designed for these machines. (Not on competition).

Detachable luggage carrier. (Not on competition).

Timing disc 022011. A circular timing disc, graduated in degrees and made of ivorine. A very useful device.

Valve holder, for valve grinding. Part number 017482.

Valve spring compressor. Part number 018276.

Pannier frames and bags.

SPARES LIST

An illustrated and priced spares list is available at a cost of 2/6 post free.

GASKET SETS

For convenience in ordering, standard sets of engine washers and gaskets as well as the washers used in the petrol and oil feed systems are stocked. Full details of contents and prices are included in the Spares List.

BADGES

Neat monogram badges are now available at a cost of 1/6, plus 6d. postage. They can be supplied as a tie pin, as a brooch or for fitting in a button hole. When ordering state type required.

TOOL KIT

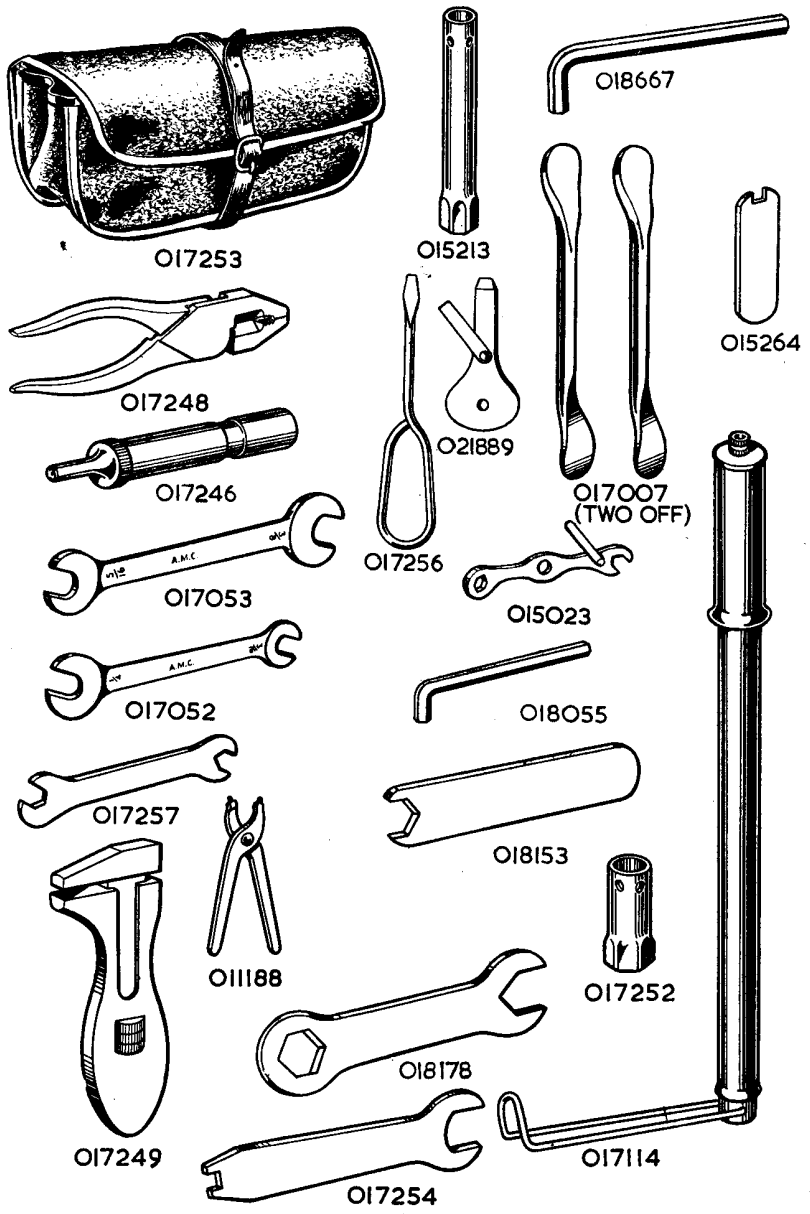

Illustration 37

GUARANTEE

We give the following guarantee with our motorcycles, motorcycle combinations and sidecars, which is given in place of any implied conditions, warranties or liabilities whatsoever, statutory or otherwise, all such implied conditions, warranties and liabilities being in all cases excluded. Any statement, description, condition or representation contained in any catalogue, advertisement, leaflet or other publication shall not be construed as enlarging, varying or overriding this guarantee. In the case of machines (a) which have been used for "hiring-out" purposes or (b) any motorcycle and/or sidecar used for any dirt track, cinder track or grass track racing or competitions (or any competition of any kind within an enclosure for which a charge is made for admission to take part in or view the competition) or (c) machines from which the trade mark, name or manufacturing number has been removed, no guarantee, condition or warranty of any kind is given or is to be implied.

We guarantee, subject to the conditions mentioned below, that all precautions which are usual and reasonable have been taken by us to secure excellence of materials and workmanship, but this guarantee is to extend and be in force for six months only from date of purchase, and damages for which we make ourselves responsible under this guarantee are limited to the free supply of a new part in exchange for the part of the motorcycle, motorcycle combination or sidecar which may have proved defective. We do not undertake to replace or refix, or bear the cost of replacing or refixing, such new part in the motorcycle, motorcycle combination or sidecar. We undertake, subject to the conditions mentioned below, to make good at any time within six months any defects in these respects. As motorcycles, motorcycle combinations and sidecars are easily liable to derangement by neglect, or misuse, this guarantee does not apply to defects caused by wear and tear, misuse or neglect.

The term "misuse" shall include amongst others the following acts :—

1. The attaching of a sidecar to a motorcycle in such a manner as to cause damage or calculated to render the latter unsafe when ridden.
2. The use of a motorcycle or of a motorcycle and sidecar combined, when carrying more persons or a greater weight than that for which the machine was designed by the manufacturers.
3. The attaching of a sidecar to a motorcycle by any form of attachment not provided, supplied or approved by us or to a motorcycle which is not designed for such use.

Any motorcycle, motorcycle combination or sidecar sent to us to be plated, enamelled or repaired will be repaired upon the following conditions, i.e., we guarantee that all precautions which are usual and reasonable have been taken by us to secure excellence of materials and workmanship, such guarantee to extend and be in force for three months only from the time such work shall have been executed or until the expiration of the six months above referred to, and this guarantee is in lieu and in exclusion of any common law or statute warranty or condition, and the damages recoverable are limited to the cost of any further work which may be necessary to amend and make good the work found to be defective.

CONDITIONS OF GUARANTEE

If a defective part should be found in our motorcycles, motorcycle combinations or sidecars, or in any part supplied by way of exchange before referred to, it must be sent to us CARRIAGE PAID and accompanied by an intimation from the owner that he desires to have it repaired or exchanged free of charge under our guarantee, and he must also furnish us at the same time with the number of the machine, the date of the purchase or the date when the alleged defective part was exchanged as the case may be.

Failing compliance with the above, such articles will lie here AT THE RISK OF THE OWNER, and this guarantee and any implied guarantee, warranty or condition shall not be enforceable.

We do not guarantee specialities such as tyres, saddles, chains, electrical equipment, lamps, etc. or any component parts supplied to the order of the Purchaser differing from standard specifications supplied with our motorcycles, motorcycle combinations, sidecars or otherwise.

NOTICE

We do not appoint agents or the sale on our behalf of our motor cycles or other goods but we assign to motor cycle dealers areas in which we supply to such dealers exclusively for re-sale in such areas. No such Dealer is authorised to transact any business, give any warranty, make any representation or incur any liability on our behalf.

INDEX

	Page
Air filter	38
A.V.C.	72, 73
Badge	86
Battery	73
Brake controls, lubrication	19, 20
Brake cover plate, front	65
Brake drums	66
Brake, front	64
Brake, pedal	66
Brake, rear	65
Brake shoes	66
Brake shoe adjustment	66
Carbon deposit, removal	28
Carburetter adjustment	36
Carburetter, function	36
Carburetter, tuning	38
Centre stand	57
Chain adjustment	46
Chain lubrication	19
Chain rear, fitting	47
Chaincase, front	41
Chainguard, removal	57
Chrome plating	80
Cleaning	80
Clutch	44
Clutch actuating mechanism	45
Clutch adjustment	44
Controls	8, 9
Correspondence	81
Cylinder barrel, removal	29
Cylinder barrel, replacement	30
Cylinder head, removal	26
Cylinder head, replacement	29
Data	6, 7
Decarbonisation	26
Driving notes	13
Dynamo chain	41, 47
Dynamo, removal	72
Dynamo, test	71
Electrical equipment	69
Engine lubrication	15
Engine oil pumps	15
Engine shock absorber	48
Forks, front	49/54
Forks, rear, lubrication	20
Free service	84
Fuel	10
Fuel tank fixing details	24
Gasket sets	86
Gearbox	39
Gearbox end-plate removal	40
Gearbox lubrication	18
Gear change	40
Headlamp	75
Horn	76
Hub lubrication	18
Ignition	69, 70
Ignition timing	33
Kickstarter	40

	Page
Law, the	82, 83
Lighting	75
Lubricants	14
Lubrication chart	21
Magneto adjustment	69
Magneto chain	48
Magneto cleaning	69
Oil consumption excessive ...	79
Oil circulation	15, 16
Oil filter	16
Oil filter, cleaning...	18
Oil tank	16
Oil tank removal	58
Optional equipment	86
Periodic maintenance	22
Petrol consumption excessive ...	79
Petrol tank removal, replacement	25
Piston removal and re-fitting ...	29, 30
Primary chain	43
Prop stand	57
Proprietary fittings	81
Rear lamp	76
Rear suspension	55/57
Repairs	81
Rocker box removal and replacement	25
Running in	12
Service	82
Sparking plug	70
Sparking plug removal	34
Speedometer, lubrication ...	20
Starting	10
Steering, causes of unsatisfactory	79
Steering head adjustment ...	49
Steering head lubrication ...	20
Stopping	11
Tappet adjustment	32
Terminals, electrical equipment...	76
Tools and toolkit	86, 87
Tracing troubles	78
Twist grip, adjustment	38
Tyres	67, 68
Tyre wear	80
Valve grinding	28
Valve guide removal	26
Valve removal	26
Valve timing	31
Wheel bearing adjustment ...	61
Wheel bearing, rear, Competition	60
Wheel bearing removal, front ...	62
Wheel bearing removal, rear ...	63
Wire connector	76